Infinity Direct Glaze Round Top

Unit Features 1
Lite Options 2
Minimum and Maximum Guidelines 3
Certified Sizes and Ratings 4
STC/OITC Glass Values 5
Mulling Guidelines for Round Top Assemblies 6
1/2" Mull Reinforcement Guidelines - Round Top 7
RT2 and RT6 Palladian Assemblies - Round Top 8
Measurement Conversions 9
Section Details: Full Frame Direct Glaze Round Tops 10
Section Details: Insert Direct Glaze Round Tops 11
Section Details: Mullions 12
Section Details: 1/2" Mull Reinforcement 13

Unit Features

Infinity Direct Glaze Round Tops: NDGRT / NINDGRT

Glass Reinforced ABS Composite Frame:

- Frame thickness: 1 29/32" (48)
- Frame depth: 2 5/32" (55) from nailing fin, 3 1/4" (83) full depth
- Exterior colors: Stone White, Sierra, Cashmere, Pebble Gray, Bahama Brown, Bronze
- Interior colors: Stone White, Sierra, EverWood™

Glass:

- Glazing seal: silicone bedding on exterior and foam glazing tape on the interior
- Standard glass is insulating LoĒ²-272® with Argon or air
- Optional glazing available: LoĒ-180™ with Argon or air, LoĒ³-366® with Argon or air, clear, tints, tempered, obscure
- Insulating glass will be altitude adjusted with capillary tubes for higher elevations
- Argon gas is not available for elevations that require capillary tubes

Gilles-Between-the-Glass (GBG):

- 11/16" (17) contoured aluminum bar
- Exterior: color matched to unit exterior
- The exterior GBG color is designed to best match the unit exterior color when used with LoĒ glass. The use of different types of glazing options may alter the exterior GBG color appearance.
- Interior color: White, Satin Taupe, Sierra, Bronze
- Pattern: open sunburst, closed hub sunburst, equal rectangular lites

Lite Options

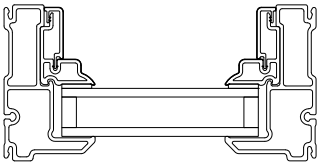

Insulating Glass

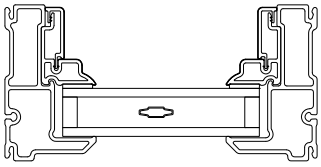

Insulating Glass
GBG

Minimum and Maximum Guidelines

Minimum and Maximum Guidelines - Direct Glaze Round Tops														
Round Top Shape	Inside Opening												Glass Limits	
	Min Width		Mn Height		Min Springline		Max Width		Max Height		Max Springline		Max Glass	
	in	mm	in	mm	in	mm	in	mm	in	mm	in	mm	ft^2	m^2
RT1	28 3/8	(721)	14 3/16	(360)	N/A		93 3/8	(2372)	48 3/16	(1224)	N/A		30	(3)
RT2	28 3/8	(721)	21 3/16	(538)	7	(178)	96 3/8	(2448)	96 3/16	(2443)	82	(2083)	52 3/32	(5)
RT5	28 3/8	(721)	11 11/16	(297)	N/A		116 3/8	(2956)	58 3/16	(1478)	N/A		43 13/16	(4)
RT6	28 3/8	(721)	8 3/16	(208)	7	(178)	116 3/8	(2956)	96 3/16	(2443)	95	(2413)	52 3/32	(5)
RT7 and RT8	17 7/8	(454)	17 11/16	(449)	N/A		86 1/4	(2191)	86 1/16	(2186)	N/A		48 13/32	(4)

Minimum and Maximum Guidelines - Direct Glaze Round Tops														
Round Top Shape	Frame Size												Glass Limits	
	Min Width		Min Height		Min Springline		Max Width		Max Height		Max Springline		Max Glass	
	in	mm	in	mm	in	mm	in	mm	in	mm	in	mm	ft^2	m^2
RT1	28	(711)	14	(356)	N/A		96	(2438)	48	(1219)	N/A		30	(3)
RT2	28	(711)	21	(533)	7	(178)	96	(2438)	96	(2438)	82	(2083)	52 3/32	(5)
RT5	28	(711)	11 1/2	(292)	N/A		116	(2946)	57 31/32	(1472)	N/A		43 13/16	(4)
RT6	28	(711)	8	(203)	7	(178)	116	(2946)	96	(2438)	95	(2413)	52 3/32	(5)
RT7 and RT8	17 1/2	(445)	17 1/2	(445)	N/A		85 7/8	(2181)	85 7/8	(2181)	N/A		48 13/32	(4)

NOTE: RT5 - Actual Inside Opening Width (IOW) and Frame Size Width (ROW) values will vary depending on the ratio of the frame width to height, please contact your Infinity representative.

Certified Sizes and Ratings

Product	Air Tested to PSF	Water Tested to psf	Design Pressure (DP)	Certification Rating	Max Overall Width		Max Overall Height	
					in	mm	in	mm
Infinity Round Top Insert	1.57	9.75	50	CW-PG50-FW	83	(2108)	83 1/2	(2121)
Infinity Round Top	1.57	9.75	50	CW-PG50-FW	83	(2108)	83 1/2	(2121)

STC/OITC Glass Values

This glazing option incorporates 3.9mm/4.7mm variable thickness glass to increase STC/OITC performance and improve sound abatement. Infinity's STC/OITC upgrade includes third party ASTM ratings and reports. STC/OITC ratings for this option and for standard 3.9mm/3.9mm insulating glass are shown in the attached chart.

Product Type	Exterior Glazing	Airspace	Interior Glazing	STC	OITC
Direct Glaze Round Top	5/32" (3.9)	11/16" (17.5)	5/32" (3.9)	30	24
	5/32" (3.9)	5/8" (16.0)	3/16" (4.7)	35	29

Mulling Guidelines for Round Top Assemblies

Factory Mulled Direct Glaze Assemblies:

- Round Top width must equal width of assembly below.
- MAXIMUM allowable configuration is 3W2H
  - MAXIMUM ROUGH OPENING not to exceed 97" (2464) x 96" (2438)
  - MAXIMUM INSIDE OPENING not to exceed 96 3/8" (2448) x 95 11/16" (2430)

NOTE: Field mulling beyond the above limitations is not recommended.

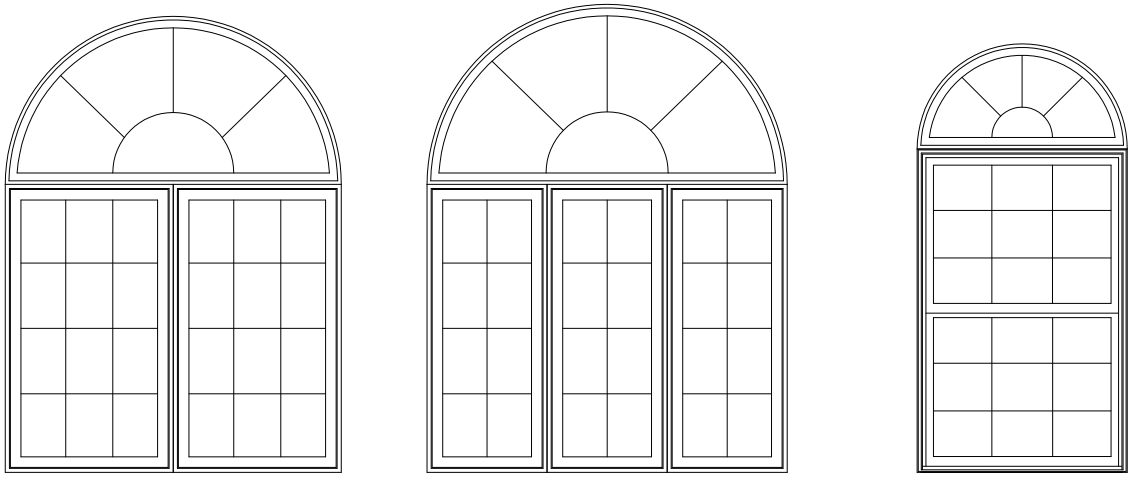

Rough Opening Assemblies:

- WIDTH
  - Frame Width = Single unit Rough Opening width MINUS 1"
  - Total Rough Opening Width = ADD all frame widths PLUS 1"
- HEIGHT
  - Frame Height = Single unit Rough Opening height MINUS 1/2"
  - Total Rough Opening Height = ADD all frame heights PLUS 1/2"

Inside Opening Assemblies:

- WIDTH:
  - Frame Width = Single unit Rough Opening width MINUS 3/8"
  - Total Rough Opening Width = ADD all frame widths PLUS 3/8"
- HEIGHT:
  - Frame Height = Single unit Rough Opening height MINUS 3/16"
  - Non-Round Top Frame Height = Inside Opening MINUS 1/4"
  - Total Rough Opening Height = ADD all frame heights PLUS 3/16"

1/2" Mull Reinforcement Guidelines - Round Top

Factory Mulled Round Top Assemblies:

- Assemblies up to 4 units wide by 1 unit high
  - MAXIMUM ROUGH OPENING not to exceed 113" (2870) x 96 1/2" (2451)
- Assemblies up to 1 unit wide by 2 units high
  - MAXIMUM ROUGH OPENING not to exceed 73" (1854) x 96 1/2" (2451)
- Assemblies up to 2 units wide by 2 units high
  - MAXIMUM ROUGH OPENING not to exceed 97 1/2" (2477) x 96 1/2" (2451)
  - MAXIMUM ROUGH OPENING not to exceed 113" (2870) x 86 1/2" (2197)

NOTE: Field mulling beyond the above limitations is not recommended.

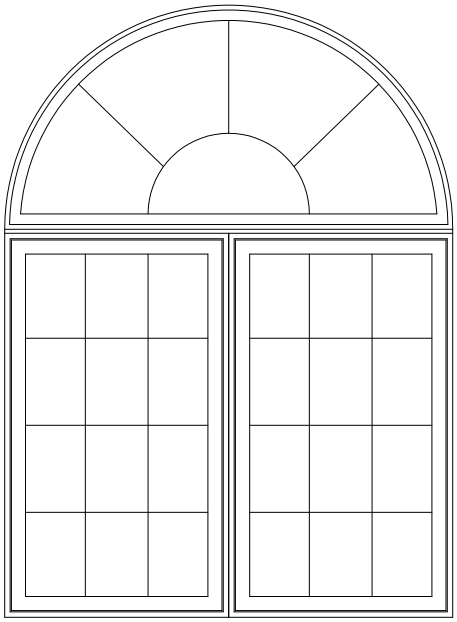

NDGRT/2W NCA
1/2" Structural Mull

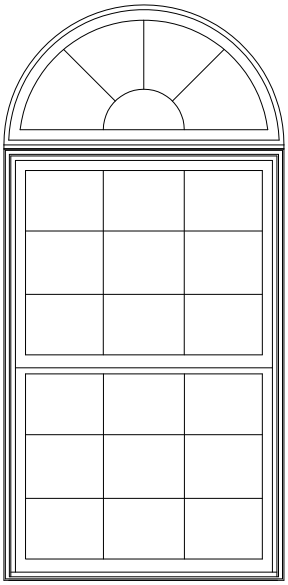

NDGRT/NDH
1/2" Structural Mull

Rough Opening Assemblies:

- WIDTH:
  - Frame Width = Single unit Rough Opening width MINUS 1"
  - Total Rough Opening Width = ADD all frame widths PLUS 1/2" (for each Vertical Mull Reinforcement) PLUS 1"
- HEIGHT:
  - Frame Height = Single unit Rough Opening height MINUS 1/2"
  - Total Rough Opening Height = ADD all frame heights PLUS 1/2" (for each Horizontal Mull Reinforcement) PLUS 1/2"

RT2 and RT6 Palladian Assemblies - Round Top

MAXIMUM ROUGH OPENING not to exceed 144" (3658) x 72 1/2" (1842)

MAXIMUM INSIDE OPENING not to exceed 143 3/8" (3642) x 72 3/16" (1834)

NOTE: Factory mulled Palladian mulls 3 units wide by 1 unit high. Assemblies are made up of 3 units. The flanker units must be of the same product and unit type and must be equal in height to the springline of the Round Top.

NOTE: Field mulling beyond the above limitations is not recommended.

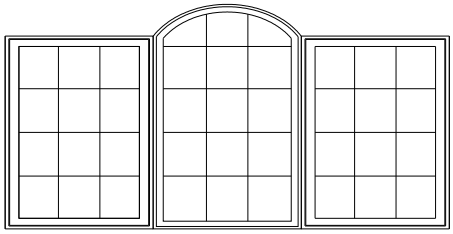

NCA - NDGRT6 - NCA

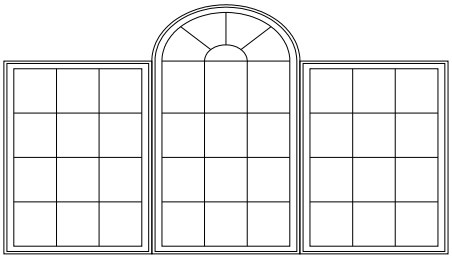

NDG - NDGRT2 - NDG

Rough Opening for Round Top Palladian Assemblies:

- WIDTH:
  - Frame Width = Single unit Rough Opening width MINUS 1"
  - Total Rough Opening Width = ADD all frame widths PLUS 1"
- HEIGHT:
  - Frame Height = Round Top Unit Rough Opening Height MINUS 1/2"

Inside Opening for Round Top Palladian Assemblies:

- WIDTH:
  - Frame Width = Single unit Rough Opening width MINUS 3/8"
  - Total Rough Opening Width = ADD all frame widths PLUS 3/8"
- HEIGHT:
  - Frame Height = Round Top Unit Rough Opening Height MINUS 3/16"

Measurement Conversions

Unit Measurements		Width		Height	
From	**To**				
Rough Opening		**in**	**mm**	**in**	**mm**
Masonry Opening	Rough Opening	-1/2	(13)	-1/4	(6)
OM of Frame	Rough Opening	+ 1	(25)	+ 1/2	(13)
Daylight Opening	Rough Opening	+ 4 25/32	(122)	+ 4 9/32	(109)
Frame		**in**	**mm**	**in**	**mm**
Daylight Opening	OM of Frame	+ 3 25/32	(96)	+ 3 25/32	(96)
Inside Opening		**in**	**mm**	**in**	**mm**
Daylight Opening	Inside Opening	+ 4 5/32	(106)	+ 3 31/32	(101)
Inside Opening	OM of Frame	+ 3/8	(10)	+ 3/16	(5)
Glass		**in**	**mm**	**in**	**mm**
Daylight Opening	Glass	+ 1 3/8	(35)	+ 1 3/8	(35)

Section Details: Full Frame Direct Glaze Round Tops

Scale: 3" = 1' 0"

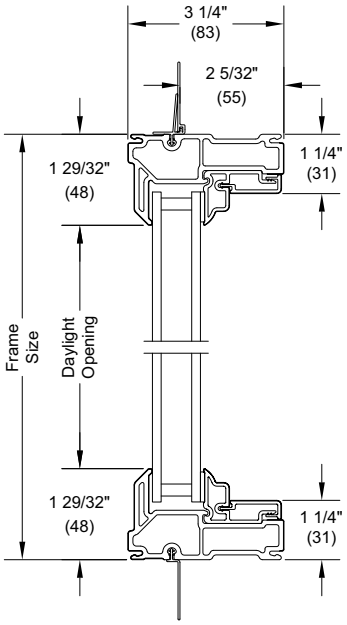

Head Jamb and Sill

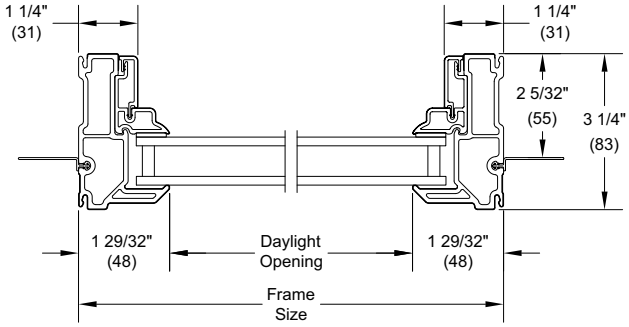

Jambs

Section Details: Insert Direct Glaze Round Tops

Scale: 3" = 1' 0"

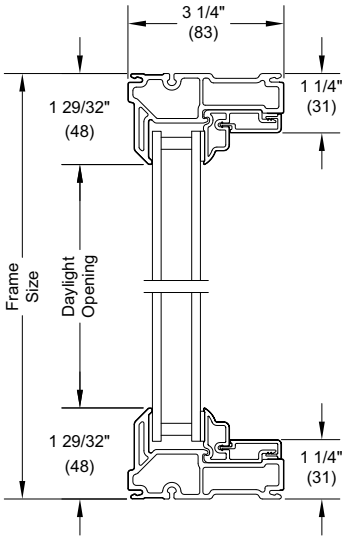

Head Jamb and Sill

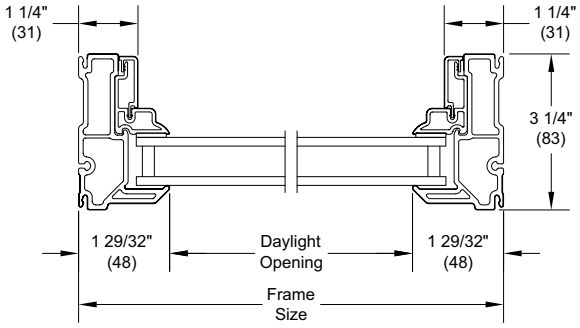

Jambs

Section Details: Mullions

Scale: 3" = 1' 0"

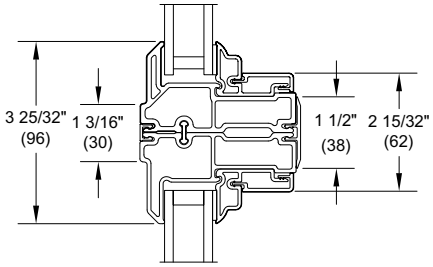

Horizontal
Mullion
NDGRT/NPDG
NINDGRT/NINPDG

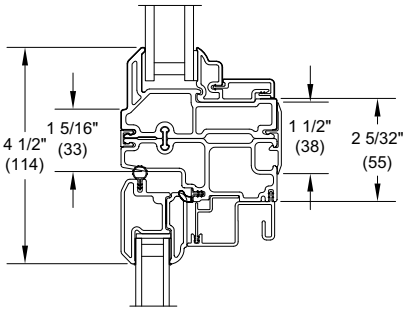

Horizontal
Mullion
NDGRT/NCA
NDGRT/NCAP
NDGRT/NAWN

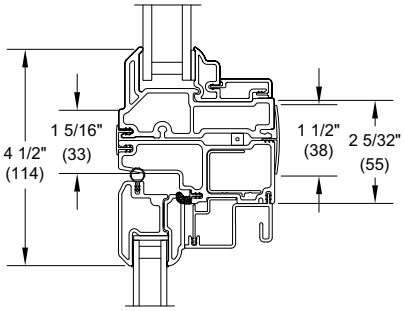

Horizontal
Mullion
NDGRT/NINCA
NDGRT/NINAW
NDGRT/NINCP
NDGRT/NINAP

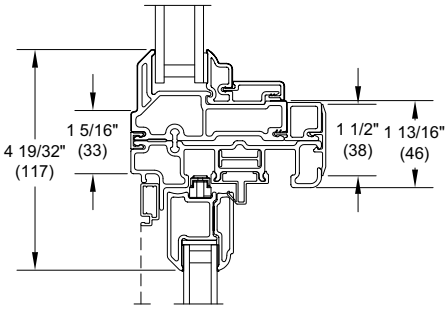

Horizontal
Mullion
NDGRT/NDH

Section Details: 1/2" Mull Reinforcement

Scale: 3" = 1' 0"

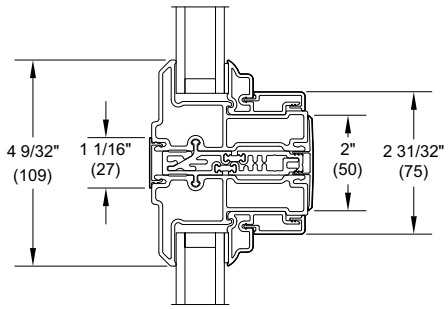

1/2" Mull Reinforcement
NDGRT/NPDG

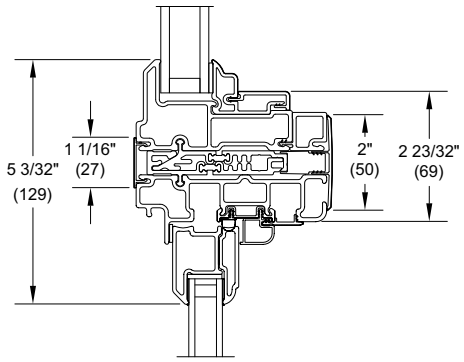

1/2" Mull Reinforcement
NDGRT, NPDG/NDHP

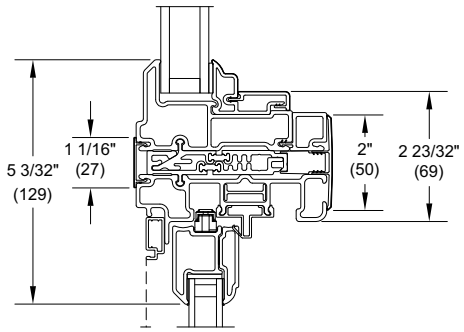

1/2" Mull Reinforcement
NDGRT, NPDG/NDH