TABLE OF CONTENTS

Integrity Inswing French Door

Product Specifications 12.2
Egress, Lite, and Vent Measurements 12.7
NFRC Values 12.8
Measurement Conversions / Abbreviations 12.9
Elevations 6/5 Height 12.10
Elevations 6/8 Height 12.11
Elevations 8/0 Height 12.12
Section Details – 4 9/16″ Jamb 12.13
Section Details – 6 9/16″ Jamb 12.17
Section Details – Mullion Details 12.21
Divided Lite Options 12.22
Installation Suggestions 12.23

SECTION 08 16 14
ULTREX® INSWING FRENCH DOOR

PART 1 GENERAL

1.1 SECTION INCLUDES

A. Ultrex® clad wood swinging door and frame (Inswing), complete with hardware, glazing, weather strip, screen, removable grilles, grilles-between-the glass, simulated divided lite, jamb extension, and standard or specified anchors, trim and attachments.

1.2 RELATED SECTIONS

A. Section 01 33 23-Submittal Procedures: Shop Drawings, Product Data, and Samples

B. Section 01 62 00-Product Options

C. Section 01 63 00-Product Substitution Procedures

D. Section 01 65 00-Product Delivery

E. Section 01 66 00-Product Storage and Handling Requirements

F. Section 01 71 00-Examination and Preparation

G. Section 01 73 00-Execution

H. Section 01 74 00-Cleaning and Waste Management

I. Section 01 75 00-Starting and Adjusting

J. Section 01 76 00-Protecting Installed Construction

K. Section 06 22 00-Millwork: Wood trim other than furnished by door and frame manufacturer

L. Section 07 92 00-Joint Sealants: Sill sealant and perimeter caulking

M. Section 08 71 00-Door Hardware: Hardware other than furnished by door and frame manufacturer

N. Section 09 90 00-Paints and Coatings: Paint or stain other than factory applied finish

1.3 REFERENCES

A. American Society for Testing and Materials (ASTM):

1. E 283: Standard Test Method for Rate of Air Leakage Through Exterior Windows, Curtain Walls, and Doors.
2. E 330: Standard Test Method for Structural Performance of Exterior Windows, Curtains Walls, and Doors by Uniform Static Air Pressure Difference.
3. E 547: Standard Test Method for Water Penetration of Exterior Windows, Curtain Walls, and Doors by Cyclic Static Air Pressure Differential.
4. E 774: Specification for Sealed Insulated Glass Units.
5. C 1036: Standard Specification for Flat Glass.

B. Window and Door Manufactures Association (WDMA): I.S.4: Industry Standard for Water Repellent Preservative Treatment for Millwork.

C. Sealed Insulating Glass Manufactures Association / Insulating Glass Certification Council (SIGMA / IGCC).

D. American Architectural Manufacturers Association / Window and Door Manufacturers Association (AAMA / WDMA):

1. ANSI/AAMA/NWWDA 101 / I.S.2-97: Voluntary Specifications for Aluminum, Vinyl (PVC) and Wood Windows and Glass Doors.
2. 101/I.S. 2/NAFS-02: Voluntary Performance Specification for Windows, Skylights and Glass Doors.

E. Window and Door Manufacturers Association (WDMA): Hallmark Certification Program.

F. American Architectural Manufacturers Association (AAMA): 613: Voluntary Performance Requirements and Test Procedures for Organic Coatings on Plastic Profiles.

G. National Fenestration Rating Council (NFRC): 101: Procedure for Determining Fenestration Product Thermal Properties.

1.4 SYSTEM DESCRIPTION

A. Design and Performance Requirements:

1. Units shall be designed to comply with 101/I.S.2-97 and 101/I.S. 2/NAFS-02 (HGD-LC30) rating.
2. Air leakage shall not exceed 0.30 cfm per linear foot of sash crack when tested at 1.57 psf according to ASTM E 283.
3. No water penetration when tested at 4.5 psf according to ASTM E 547.
4. Units shall be designed to comply with ASTM E330 for structural performance when tested at the following pressures: (+/-45 Psf).

1.5 SUBMITTALS

A. Shop Drawings: Submit shop drawings under provisions of Section 01 33 23.

B. Product Data: Submit catalog data under provisions of Section 01 33 23.

C. Samples:

1. Submit corner section under provisions of Section 01 33 23.
2. Include glazing system, quality of construction, and specified finish.

D. Quality Control Submittals: Certificates: Submit manufacturer's certifications indicating compliance with specified performance and design requirements under provisions of Section 01 33 23.

1.6 QUALITY ASSURANCE

A. Regulatory Requirements: Emergency Egress or Rescue: Comply with requirements for sleeping units of [IBC International Building Code] [BOCA Basic Building Code] [Southern Building Code] [Uniform Building Code] [_____].

1.7 DELIVERY

A. Comply with provisions of Section 01 65 00.

B. Deliver in original packaging and protect from weather.

1.8 STORAGE AND HANDLING

A. Prime or seal wood surfaces, including surface to be concealed by wall construction, if more than thirty (30) days will expire between delivery and installation.

B. Store door panels flat on a level surface in a clean and dry storage area under provisions of Section 01 66 00. Seal unfinished top and bottom edges of door panels if stored at the job site more than one (1) week.

C. Condition doors to local average humidity before hanging.

1.9 WARRANTY

A. Doors shall be warranted to be free from defects in manufacturing, materials, and workmanship for a period of ten (10) years from purchase date.

B. Door glass shall be warranted to be free from defects in manufacturing, materials and workmanship for a period of twenty (20) years from the purchase date.

PART 2 PRODUCTS

2.1 MANUFACTURED UNITS

A. Description: Factory assembled Ultrex®Swinging Door, as manufactured by Integrity Windows and Doors, Fargo, North Dakota or Roanoke, Virginia.

2.2 FRAME DESCRIPTION

A. Interior: Clear pine exposed surfaces.

1. Kiln dried to a moisture content no greater than twelve (12) percent at the time of fabrication.
2. Water repellent, preservative treated in accordance with ANSI / NWWDA I.S.4.

B. Exterior: Fiberglass reinforced plastic (Ultrex®) clad 0.080 inch (2 mm) thick.

C. Composite frame thickness: 1-11/32 inches (36 mm).

D. Frame width: 4-9/16 inches (116 mm). Beige fiberglass reinforced plastic (Ultrex®) sill with oak interior sill liner.

2.3 PANEL DESCRIPTION

A. Interior: Finger jointed cores with clear pine veneers.

1. Kiln dried to a moisture content no greater than twelve (12) percent at time of fabrication. Panel corners mortised and tenoned.
2. Water repellent preservative treated in accordance with ANSI / NWWDA I.S.4.

B. Core material: Laminated veneered lumber (LVL).

C. Exterior: Fiberglass reinforced plastic (Ultrex®) clad 0.110 inch (2.8 mm) thick.

D. Composite panel thickness: 1-3/4 inches (44mm).

E. Rail height dimension: top rail 3 5/8 inches (92 mm), bottom rail 6 inches (152 mm).

2.4 GLAZING

A. Select quality complying with ASTM C 1036. Shall comply with 16 CFR 1201 Safety Standard for Architectural Glazing Materials. Insulating glass SIGMA/IGCC certified to performance level CBA when tested in accordance with ASTM E 774.

B. Glazing Method: 3/4 inch (19 mm) Tempered Insulating Glass.

C. Glass Type: [LoĒ^{2}-272® with Argon gas Tempered] [LoĒ^{3}-366® with Argon gas Tempered].

D. Glazing Seal: Silicone bedding, interior and exterior.

2.5 FINISH

A. Exterior: Factory baked on acrylic urethane. Color: Stone White; Pebble Gray; Bronze; Cashmere.

B. Interior: Treated bare wood; White interior factory finish.

2.6 HARDWARE

A. Hinges: Three 4 inch (101 mm) butt hinges, adjustable.

1. Finish: Powder coated, gold tone, or optional powder coated white, gray and dark brown

B. Handle Set: Lever operated.

1. Finish: Almond Frost; White; Solid Brass; Satin Nickel; Oil Rubbed Bronze.

C. Locking System: Multi-point locking system. Stainless steel passage latch, head and foot bolts operated from lever set.

2.7 WEATHER STRIP

A. Foam filled bulb leaf weather strip at head jamb and jambs. Continuous bulb at sill with slip coated, ultraviolet and wear resistant contact surface. Color: Beige.

2.8 JAMB EXTENSION

A. Furnish jamb extension 6-9/16 (167 mm) factory installed (shipped loose) 5-5/16 (135 mm); 6-13/16 (160 mm) shipped loose.

B. Finish: Treated bare wood; White interior factory finish.

2.9 INSECT SCREENS

A. Sliding screen for 2 panel door: Extruded aluminum sliding frame 0.045 inch (1.2 mm) thick. Top hung roller assembly with stainless steel ball bearings in nylon wheels, top rollers adjustable up to 3/8 inch (10 mm). Frame to have edge mounted wool pile bug strip. Screen mesh: 18 by 16, Charcoal fiberglass.

1. Frame Finish: White; Pebble Gray; Bronze; Cashmere.
2. Flush mounted ridged nylon handle on both sides of screen. Ridged PVC glide.

B. Swinging screen for 1 panel door: Extruded aluminum 0.055 inch (1.4 mm) thick. Frame to have edge mounted wool pile bug strip. Screen mesh: 18 by 16, Charcoal fiberglass.

1. Frame Finish: White; Pebble Gray; Bronze; Cashmere.
2. Black nylon handles on both sides of screen. Includes latch, pneumatic closure, and sweep.

2.10 REMOVABLE GRILLES

A. 3/4 X 15/32 inch (19 mm X 12 mm) pine.

1. Pattern: Rectangular.
2. Finish: Clear pine; (White interior factory finish).

2.11 GRILLES-BETWEEN-THE-GLASS (GBG)

A. Manufactured from aluminum in an 11/16″ (17mm) wide contoured profile placed between the two panes of glass. Available in rectangular and prairie lite cut patterns. Prairie lite pattern - nine lite. Size limitations may apply to prairie lite cut availability.

1. Colors: White (white interior and exterior); Pebble Gray (white interior and pebble gray exterior); Bronze (bronze exterior and white interior); Cashmere (cashmere exterior and white interior).

2.12 SIMULATED DIVIDED LITES (SDL)

A. 7/8″ (22 mm) wide. Internal spacer bar available for units glazed with LoĒ^{3}-366® glass. No internal spacer bar available for units glazed with LoĒ^{2}-272® glass.

1. Exterior muntins: Extruded Ultrex. Available in rectangular and prairie lite cut patterns. Prairie lite pattern - nine lite. Size limitations may apply to prairie lite cut availability.
   a. Color: Stone White; Pebble Gray; Bronze; Cashmere.
2. Interior muntins: Clear pine; (White interior factory finish).

2.13 ACCESSORIES AND TRIM

A. Installation Accessories:

1. Factory installed nailing fin at head and side jambs.
2. Installation Brackets: 6-3/8 inches (162 mm); 9-3/8 inches (238 mm); 15-3/8 inches (390 mm).
3. Mullion kit: Mullion kit for field assembly of units. Kit includes: Instructions, aluminum pins, mullion tie, sealant foam tape, masonry clips, mull brackets, #7 x 3/4 inch installation bracket screws, #8 x 3/8 inch screws, interior mullion trim, and nailing fin connectors.

PART 3 EXECUTION

3.1 EXAMINATION

A. Verification of Conditions: Before Installation, verify openings are plumb, square, and of proper dimension as required in Section 01 71 00. Report frame defects or unsuitable conditions to the General Contractor before proceeding.

B. Acceptance of Conditions: Beginning of installation confirms acceptance of existing conditions.

3.2 INSTALLATION

A. Comply with Section 01 73 00.

B. Assemble and install doors and frames according to manufacturer's instructions and reviewed shop drawings.

C. Set door sills in full bed of sealant, install backing material and sealant at head and side jambs, and as specified in Section 07 92 00. Do not use expansive foam sealant.

D. Install frames and stationary panels as required.

E. Install sill support before using door.

F. Install accessory items as required.

G. Use finish nails to apply wood trim and mouldings.

3.3 STARTING AND ADJUSTING

A. Adjust door to work freely with hardware functioning properly. Re-adjust at completion of project if directed.

3.4 CLEANING

A. Remove visible labels and adhesive residue according to manufacturer's instructions.

B. Leave doors and glass in a clean condition. Final cleaning as required in Section 01 74 00.

3.5 PROTECTING INSTALLED CONSTRUCTION

A. Comply with Section 01 76 00.

B. Cover doors and frames during painting or other construction operations that may cause damage.

C. Protect sill from damage by chemicals, solvents, paint, or construction traffic.

END OF SECTION

EGRESS, LITE AND VENT MEASUREMENTS

EGRESS, LITE, AND VENT MEASUREMENTS								
	UNIT #	DAYLIGHT OPENING WIDTH PER PANEL	DAYLIGHT OPENING HEIGHT PER PANEL	LITE Sq. ft	VENT Sq. ft	EGRESS WIDTH	EGRESS HEIGHT	EGRESS Sq. ft
INSWING FRENCH DOOR X								
IIFD X	2665 1 Panel Door	21 11/32″	67 3/32″	9.95	14.69	27.63	76.53	14.69
	3065 1 Panel Door	21 11/32″	67 3/32″	12.74	17.88	33.63	76.53	17.88
	2668 1 Panel Door	21 11/32″	69 19/32″	10.32	15.17	27.63	79.03	15.17
	3068 1 Panel Door	21 11/32″	69 19/32″	13.22	18.46	33.63	79.03	18.46
	2680 1 Panel Door	21 11/32″	83 3/32″	12.32	17.76	27.63	92.53	17.76
	3080 1 Panel Door	21 11/32″	83 3/32″	15.78	21.61	33.63	92.53	21.61
INSWING FRENCH DOOR XO - OX								
IIFD XO-OX	5065 2 Panel Door	27 11/32″	67 3/32″	19.89	14.37	27.46	75.36	14.37
	6065 2 Panel Door	27 11/32″	67 3/32″	25.48	17.51	33.46	75.36	17.51
	5068 2 Panel Door	27 11/32″	69 19/32″	20.63	14.85	27.46	77.86	14.85
	6068 2 Panel Door	27 11/32″	69 19/32″	26.43	18.09	33.46	77.86	18.09
	5080 2 Panel Door	27 11/32″	83 3/32″	24.63	17.42	27.46	91.36	17.42
	6080 2 Panel Door	27 11/32″	83 3/32″	31.56	21.23	33.46	91.36	21.23
INSWING FRENCH DOOR XX								
IIFD XX	5065 2 Panel Door	27 11/32″	67 3/32″	19.89	29.93	56.31	76.53	29.93
	6065 2 Panel Door	27 11/32″	67 3/32″	25.48	36.31	68.31	76.53	36.31
	5068 2 Panel Door	27 11/32″	69 19/32″	20.63	30.91	56.31	79.03	30.91
	6068 2 Panel Door	27 11/32″	69 19/32″	26.43	37.49	68.31	79.03	37.49
	5080 2 Panel Door	27 11/32″	83 3/32″	24.63	36.19	56.31	92.53	36.19
	6080 2 Panel Door	27 11/32″	83 3/32″	31.56	43.90	68.31	92.53	43.90

EGRESS MEASUREMENTS

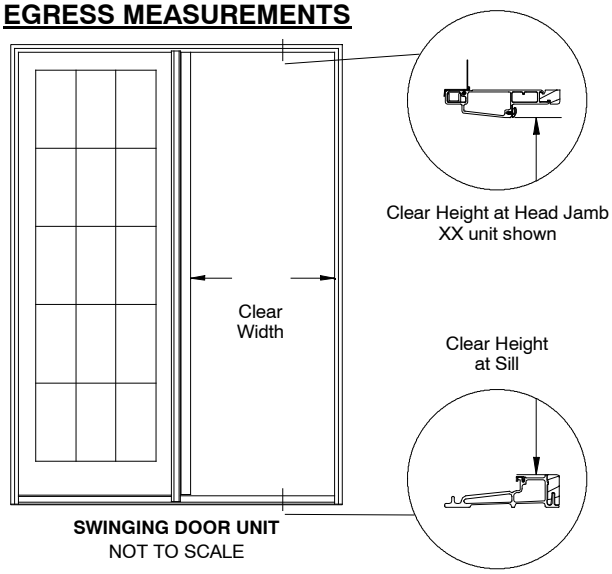

SWINGING DOOR UNIT
NOT TO SCALE

International Building Code - 2006

For Specific .Guidelines refer to codes:
IBC 2006 Section 1008 and
IRC 2006 Section 310

Code restrictions may vary depending on your local building codes.
For further information contact your Integrity representative.

NFRC VALUES

THERMAL PERFORMANCE VALUES Integrity Inswing French French Door 3.0 mm Size Tested 39 x 79 (991 x 2007)					
ENERGY DATA	**U-Value**	**R-Value**	**SHGC**	**VLT**	**Energy Star**
Insulating Glass LoĒ2 272® - Air	0.33	3.03	0.29	0.47	
Insulating Glass LoĒ2 272 - Argon	0.30	3.33	0.27	0.47	Complies
Insulating Glass LoĒ2 272 - Air GBG	0.33	3.03	0.24	0.40	
Insulating Glass LoĒ2 272 - Argon GBG	0.30	3.33	0.24	0.40	Complies
Insulating Glass LoĒ2 272 - Air SDL	0.33	3.03	0.24	0.40	
Insulating Glass LoĒ2 272 - Argon SDL	0.30	3.33	0.24	0.40	Complies
Insulating Glass LoĒ3 366® - Air	0.32	3.13	0.19	0.42	Complies
Insulating Glass LoĒ3 366 - Argon	0.29	3.45	0.18	0.42	Complies
Insulating Glass LoĒ3 366 - Air GBG	0.32	3.13	0.16	0.36	Complies
Insulating Glass LoĒ3 366 - Argon GBG	0.29	3.45	0.16	0.36	Complies
Insulating Glass LoĒ3 366 - Air SDL	0.32	3.13	0.16	0.36	Complies
Insulating Glass LoĒ3 366 - Argon SDL	0.29	3.45	0.16	0.36	Complies
Insulating Glass LoĒ3 366 - Air SDL W/Spacer	0.34	2.94	0.16	0.36	
Insulating Glass LoĒ3 366 - Argon SDL W/Spacer	0.31	3.23	0.16	0.36	Complies

THERMAL PERFORMANCE VALUES Integrity Inswing French French Door 4.0 mm Size Tested 39 x 79 (991 x 2007)					
ENERGY DATA	**U-Value**	**R-Value**	**SHGC**	**VLT**	**Energy Star**
Insulating Glass LoĒ2 272® - Air	0.33	3.03	0.27	0.46	
Insulating Glass LoĒ2 272 - Argon	0.30	3.33	0.27	0.46	Complies
Insulating Glass LoĒ2 272 - Air GBG	0.33	3.03	0.24	0.40	
Insulating Glass LoĒ2 272 - Argon GBG	0.30	3.33	0.24	0.40	Complies
Insulating Glass LoĒ2 272 - Air SDL	0.33	3.03	0.24	0.40	
Insulating Glass LoĒ2 272 - Argon SDL	0.30	3.33	0.24	0.40	Complies
Insulating Glass LoĒ3 366® - Air	0.32	3.13	0.19	0.42	Complies
Insulating Glass LoĒ3 366 - Argon	0.29	3.45	0.18	0.42	Complies
Insulating Glass LoĒ3 366 - Air GBG	0.32	3.13	0.16	0.36	Complies
Insulating Glass LoĒ3 366 - Argon GBG	0.29	3.45	0.16	0.36	Complies
Insulating Glass LoĒ3 366 - Air SDL	0.32	3.13	0.16	0.36	Complies
Insulating Glass LoĒ3 366 - Argon SDL	0.29	3.45	0.16	0.36	Complies
Insulating Glass LoĒ3 366 - Air SDL W/Spacer	0.33	3.03	0.16	0.36	
Insulating Glass LoĒ3 366 - Argon SDL W/Spacer	0.30	3.33	0.16	0.36	Complies

Product Values are determined using the National Fenestration Rating Council Procedures fro determining fenestration product values.

U-Value: (Btu/hr-sq. ft-*F) Lower the U-value, the greater the resistance to heat flow and better its insulating value.

R-Value: (1/U-Value) Higher the R-Value, the greater the resistance to heat flow and better its insulating value.

VLT: Visible Light Transmittance - Percentage of visible light transmitted through the unit.

SHGC: Solar Heat Gain Coefficient: The lower a window's SHGC , the less solar heat it transmits, and the greater it's shading ability.

MEASUREMENT CONVERSIONS AND ABBREVIATIONS

MEASUREMENT CONVERSIONS				
ROUGH OPENING TO	**WIDTH**		**HEIGHT**	
1 Panel	**Imperial**	**Metric**	**Imperial**	**Metric**
Masonry Opening	-1/2″	- 13 mm	- 1/4″	- 6 mm
OM of Frame	-1″	- 25 mm	- 1/2″	- 13 mm
OM of Panel	- 2 3/4″	- 70 mm	-3 1/4″	- 83 mm
Daylight Opening	- 9 15/16″	- 253 mm	- 12 7/8″	- 327 mm
OM of Glass	- 8 3/4″	- 222 mm	- 11 11/16″	- 297 mm
OM of Screen	- 2 3/4″	- 70 mm	- 2 5/8″	- 67 mm
2 Panel				
Masonry Opening	- 1/2″	- 13 mm	- 1/4″	- 6 mm
OM of Frame	- 1″	- 25 mm	- 1/2″	- 13 mm
OM of Panel	(÷ 2) - 1 3/8″	(÷ 2) - 36 mm	- 3 1/4″	- 83 mm
Daylight Opening	(÷ 2) - 8 5/8″	(÷ 2) - 220 mm	- 12 7/8″	- 327 mm
OM of Glass	(÷ 2) - 7 3/8″	(÷ 2) - 188 mm	- 11 11/16″	- 297 mm
OM of Screen (OX XO)	(÷ 2) -13/16″	(÷ 2) - 21 mm	- 2 1/4″	- 57 mm
OM of Screen (XX)	(÷ 2) -7/8″	(÷ 2) - 22 mm	- 2 5/8″	- 67 mm

For Three Panel conversions, RO to Glass, Panels, and Screens, please contact the Integrity Support Line (1-800-587-2712).

ABBREVIATIONS

FS = Frame Size
GBG = Grille Between Glass
NSFD = Infinity Sliding French Door
L = Left Handed
MO = Masonry Opening
mm = Millimeters
O = Stationary
OM = Outside Measurement
R = Right Handed
RO = Rough Opening
SDL = Simulated Divided Lite
Sq. ft = Square feet
X = Operating

INTEGRITY® FROM MARVIN INSWING FRENCH DOOR
ELEVATIONS 1 AND 2 PANEL DOORS 6/5 HT

NOT TO SCALE

	IIFD2665 O	IIFD2665 XR	IIFD2665 XL	IIFD3065 O	IIFD3065 XR	IIFD3065 XL
Mas. Opg.	2-6 13/16 (783)	2-6 13/16 (783)	2-6 13/16 (783)	3-0 13/16 (935)	3-0 13/16 (935)	3-0 13/16 (935)
Rgh. Opg.	2-7 5/16 (795)	2-7 5/16 (795)	2-7 5/16 (795)	3-1 5/16 (948)	3-1 5/16 (948)	3-1 5/16 (948)
Frame Size	2-6 5/16 (770)	2-6 5/16 (770)	2-6 5/16 (770)	3-0 5/16 (923)	3-0 5/16 (923)	3-0 5/16 (923)
Glass Size	22 19/32" (574)	22 19/32" (574)	22 19/32" (574)	28 19/32" (726)	28 19/32" (726)	28 19/32" (726)

6-7 3/4 (2026)
6-8 (2032)
6-7 1/2 (2019)
68 9/32" (1734)

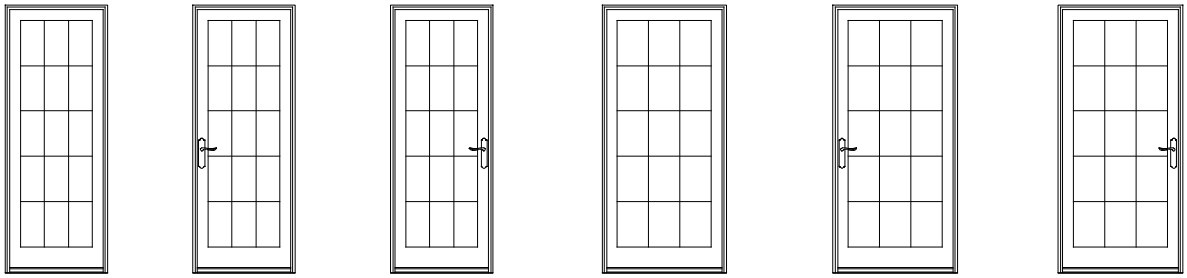

	IIFD5065 XO	IIFD5065 OX	IIFD6065 XO	IIFD6065 OX
Mas. Opg.	4-11 1/2 (1511)	4-11 1/2 (1511)	5-11 1/2 (1816)	5-11 1/2 (1816)
Rgh. Opg.	5-0 (1524)	5-0 (1524)	6-0 (1829)	6-0 (1829)
Frame Size	4-11 (1499)	4-11 (1499)	5-11 (1803)	5-11 (1803)
Glass Size	22 19/32" (574)	22 19/32" (574)	28 19/32" (726)	28 19/32" (726)

6-7 3/4 (2026)
6-8 (2032)
6-7 1/2 (2019)
68 9/32" (1734)

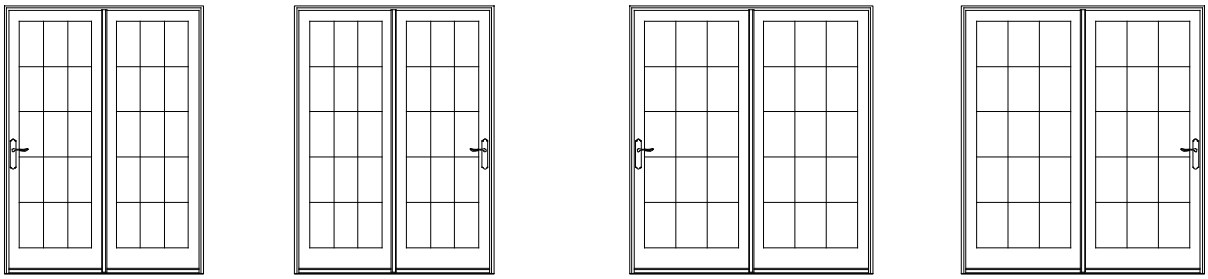

6-7 3/4 (2026)
6-8 (2032)
6-7 1/2 (2019)
68 9/32" (1734)

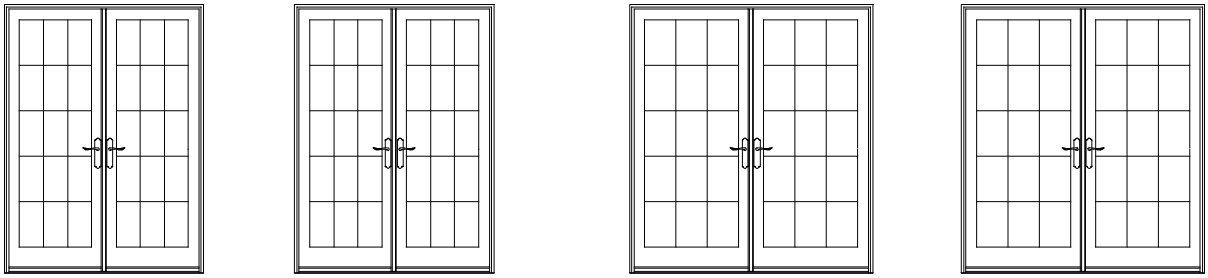

IIFD5065 XXR | IIFD5065 XXL | IIFD6065 XXR | IIFD6065 XXL

O = Stationary Panel
X = Operating Panel
L = Left Panel
R = Right Panel

All units viewed from exterior.

NOTE:
One lite is standard, elevations are shown with rectangular lite pattern. Round top transoms available for field assembly, refer to round top chapter. Imperial and metric dimensions are shown metric dimensions are in millimeters. Direct glaze transoms available in 6 lite Prairie cut. Equal lites also available.

INTEGRITY® FROM MARVIN INSWING FRENCH DOOR
ELEVATIONS 1 AND 2 PANEL DOORS 6/8 HT

NOT TO SCALE

	IIFD2668 O	IIFD2668 XR	IIFD2668 XL	IIFD3068 O	IIFD3068 XR	IIFD3068 XL
Mas. Opg.	2-6 13/16 (783)	2-6 13/16 (783)	2-6 13/16 (783)	3-0 13/16 (935)	3-0 13/16 (935)	3-0 13/16 (935)
Rgh. Opg.	2-7 5/16 (795)	2-7 5/16 (795)	2-7 5/16 (795)	3-1 5/16 (948)	3-1 5/16 (948)	3-1 5/16 (948)
Frame Size	2-6 5/16 (770)	2-6 5/16 (770)	2-6 5/16 (770)	3-0 5/16 (923)	3-0 5/16 (923)	3-0 5/16 (923)
Glass Size	22 19/32" (574)	22 19/32" (574)	22 19/32" (574)	28 19/32" (726)	28 19/32" (726)	28 19/32" (726)

6-10 1/4 (2089)
6-10 1/2 (2096)
6-10 (2083)
70 25/32" (1798)

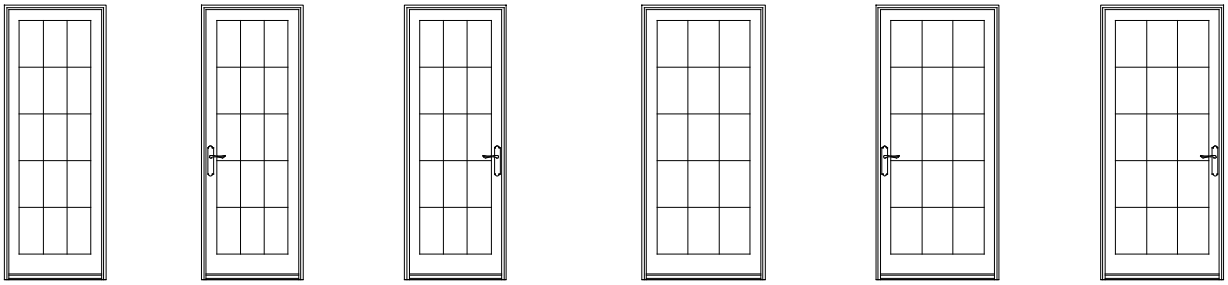

IIFD2668 O | IIFD2668 XR | IIFD2668 XL | IIFD3068 O | IIFD3068 XR | IIFD3068 XL

	IIFD5068 XO	IIFD5068 OX	IIFD6068 XO	IIFD6068 OX
Mas. Opg.	4-11 1/2 (1511)	4-11 1/2 (1511)	5-11 1/2 (1816)	5-11 1/2 (1816)
Rgh. Opg.	5-0 (1524)	5-0 (1524)	6-0 (1829)	6-0 (1829)
Frame Size	4-11 (1499)	4-11 (1499)	5-11 (1803)	5-11 (1803)
Glass Size	22 19/32" (574)	22 19/32" (574)	28 19/32" (726)	28 19/32" (726)

6-10 1/4 (2089)
6-10 1/2 (2096)
6-10 (2083)
70 25/32" (1798)

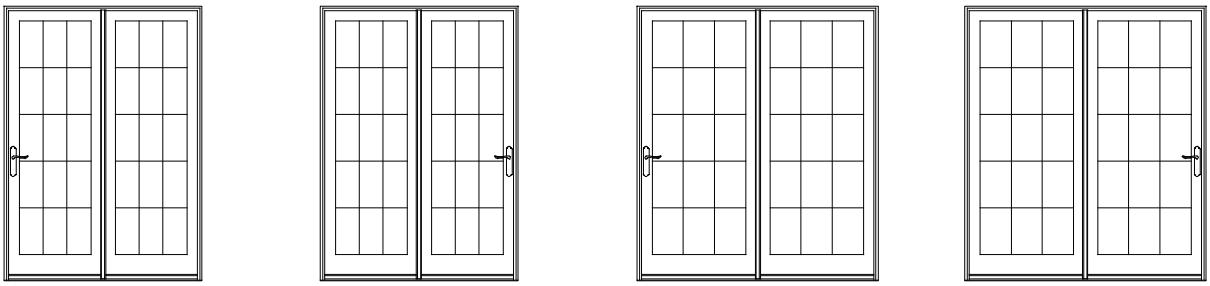

IIFD5068 XO | IIFD5068 OX | IIFD6068 XO | IIFD6068 OX

6-10 1/4 (2089)
6-10 1/2 (2096)
6-10 (2083)
70 25/32" (1798)

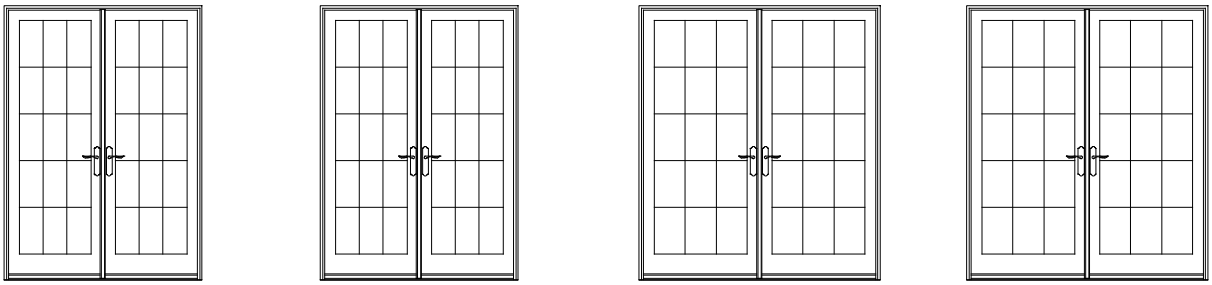

IIFD5068 XXR | IIFD5068 XXL | IIFD6068 XXR | IIFD6068 XXL

O = Stationary Panel
X = Operating Panel
L = Left Panel
R = Right Panel

All units viewed from exterior.

NOTE:
One lite is standard, elevations are shown with rectangular lite pattern. Round top transoms available for field assembly, refer to round top chapter. Imperial and metric dimensions are shown metric dimensions are in millimeters. Equal lites also available.

INTEGRITY® FROM MARVIN INSWING FRENCH DOOR
ELEVATIONS 1 AND 2 PANEL DOORS 8/0 HT

NOT TO SCALE

	IIFD2680 O	IIFD2680 XR	IIFD2680 XL	IIFD3080 O	IIFD3080 XR	IID3080 XL
Mas. Opg.	2-6 13/16 (783)	2-6 13/16 (783)	2-6 13/16 (783)	3-0 13/16 (935)	3-0 13/16 (935)	3-0 13/16 (935)
Rgh. Opg.	2-7 5/16 (795)	2-7 5/16 (795)	2-7 5/16 (795)	3-1 5/16 (948)	3-1 5/16 (948)	3-1 5/16 (948)
Frame Size	2-6 5/16 (770)	2-6 5/16 (770)	2-6 5/16 (770)	3-0 5/16 (923)	3-0 5/16 (923)	3-0 5/16 (923)
Glass Size	22 19/32" (574)	22 19/32" (574)	22 19/32" (574)	28 19/32" (726)	28 19/32" (726)	28 19/32" (726)

7-11 3/4 (2432)
8-0 (2438)
7-11 1/2 (2426)
84 9/32" (2141)

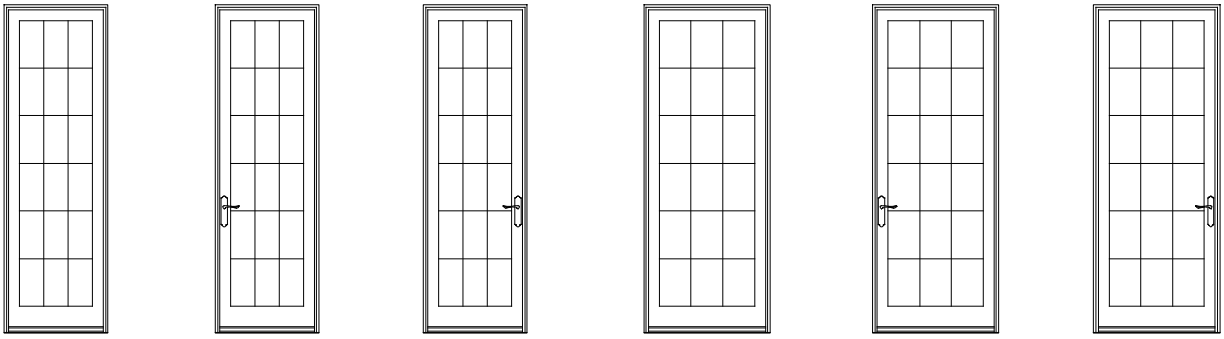

	IIFD5080 XO	IIFD5080OX	IIFD6080 XO	IIFD6080 OX
Mas. Opg.	4-11 1/2 (1511)	4-11 1/2 (1511)	5-11 1/2 (1816)	5-11 1/2 (1816)
Rgh. Opg.	5-0 (1524)	5-0 (1524)	6-0 (1829)	6-0 (1829)
Frame Size	4-11 (1499)	4-11 (1499)	5-11 (1803)	5-11 (1803)
Glass Size	22 19/32" (574)	22 19/32" (574)	28 19/32" (726)	28 19/32" (726)

7-11 3/4 (2432)
8-0 (2438)
7-11 1/2 (2426)
84 9/32" (2141)

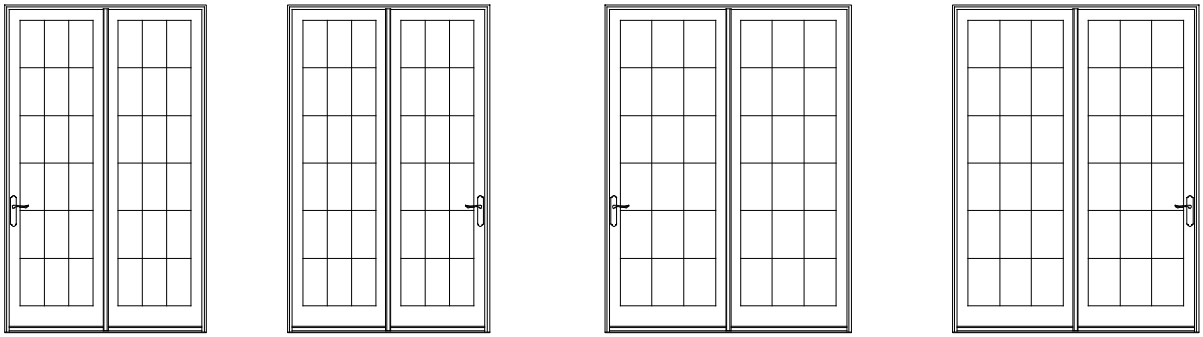

7-11 3/4 (2432)
8-0 (2438)
7-11 1/2 (2426)
84 9/32" (2141)

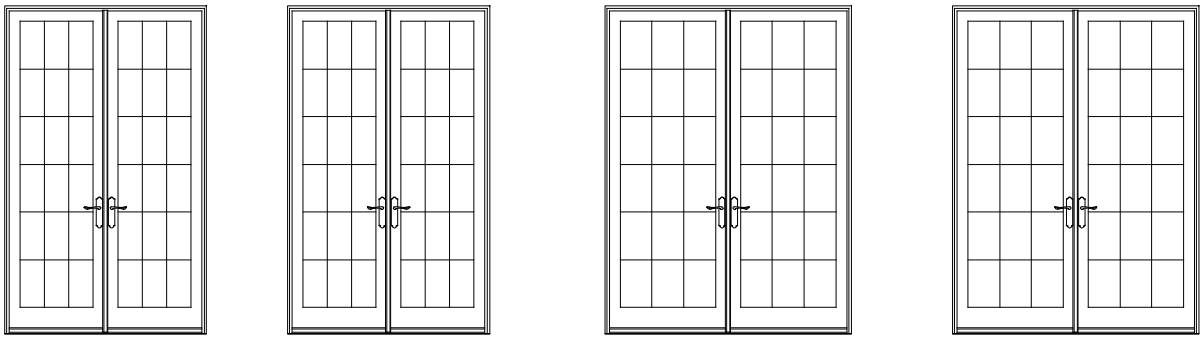

IIFD5080 XXR | IIFD5080 XXL | IIFD6080 XXR | IIFD6080 XXL

O = Stationary Panel
X = Operating Panel
L = Left Panel
R = Right Panel

All units viewed from exterior.

NOTE:
One lite is standard, elevations are shown with rectangular lite pattern. Round top transoms available for field assembly, refer to round top chapter. Imperial and metric dimensions are shown metric dimensions are in millimeters. Equal lites also available.

SECTION DETAILS - 4 9/16″ JAMB - XXR OPERATOR

Scale 3″ = 1′ 0″

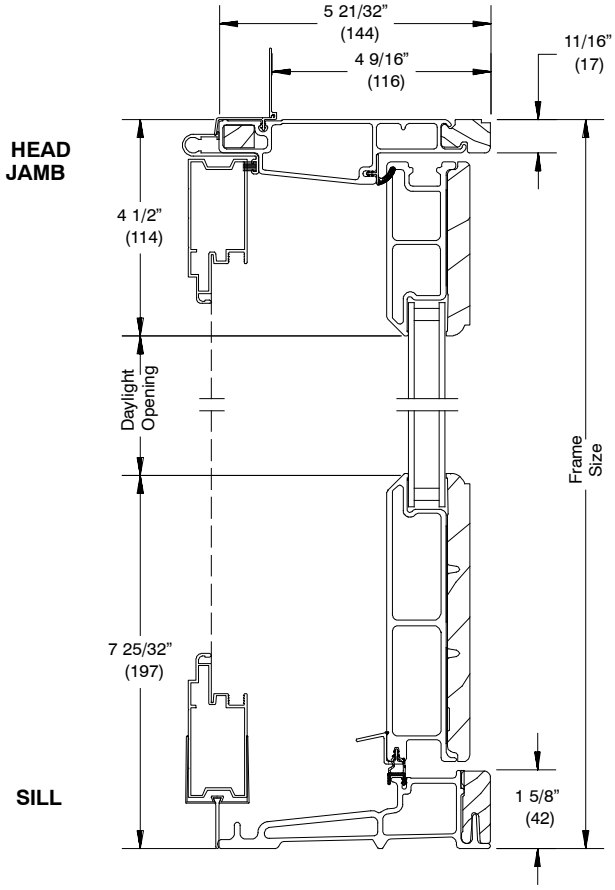

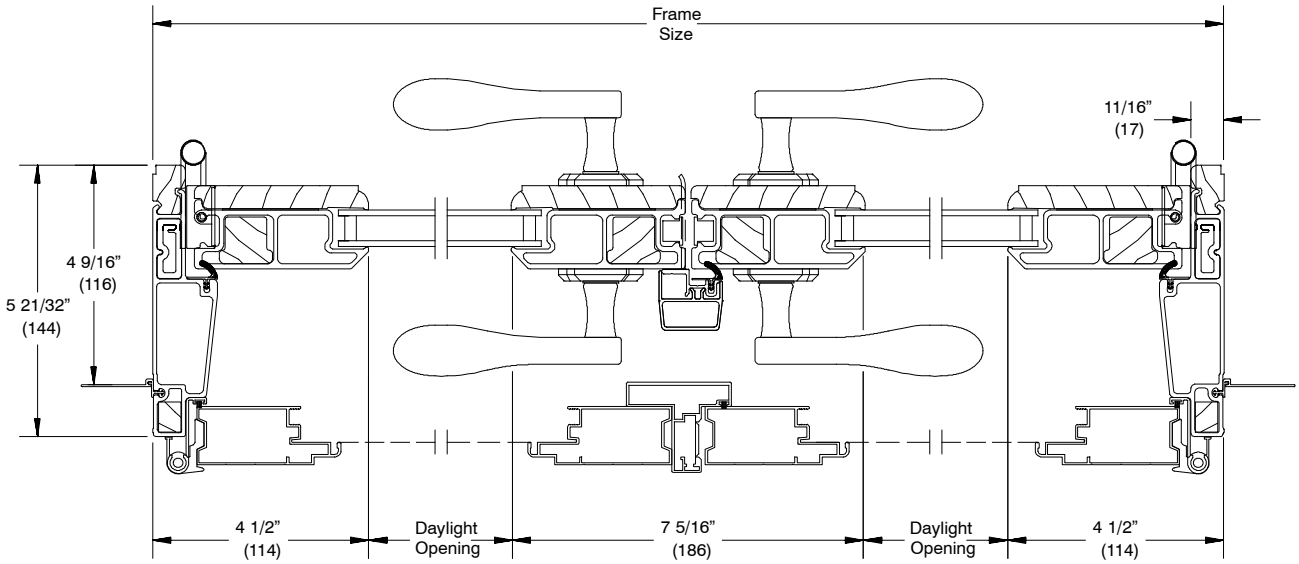

2 PANEL JAMB - XXR

SECTION DETAILS - 4 9/16″ JAMB - XO OPERATOR

Scale 3″ = 1′ 0″

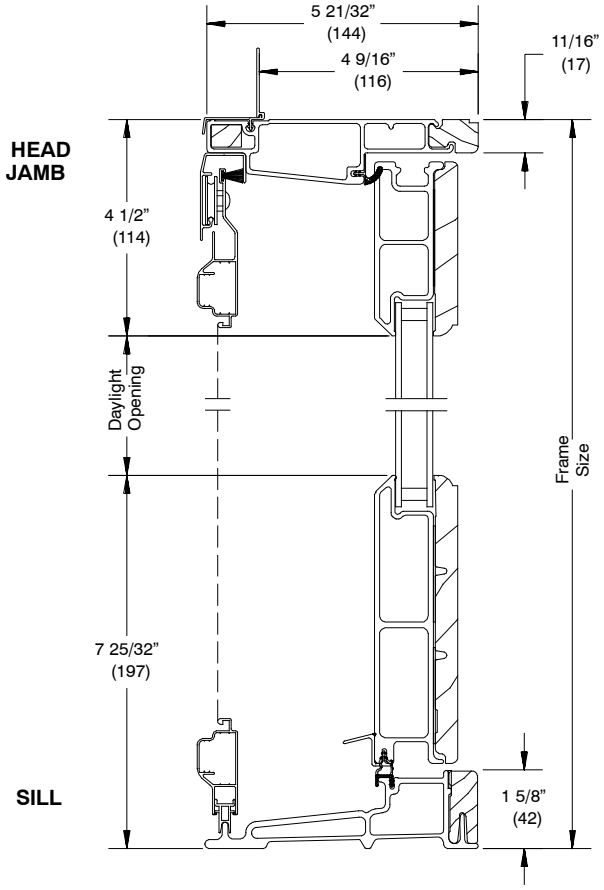

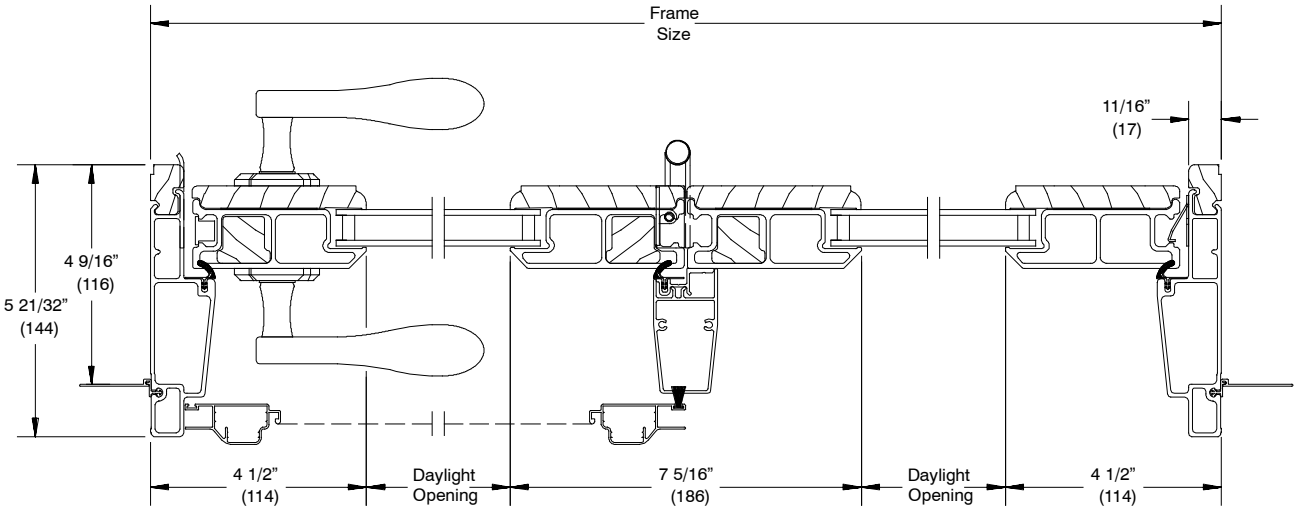

2 PANEL JAMB - XO

SECTION DETAILS - 4 9/16″ JAMB - X - OPERATOR

Scale 3″ = 1′ 0″

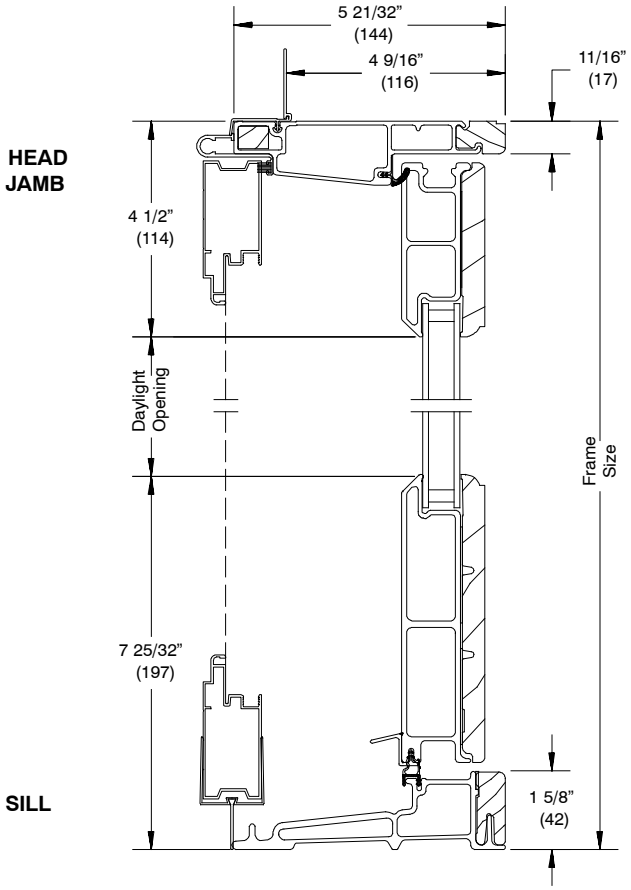

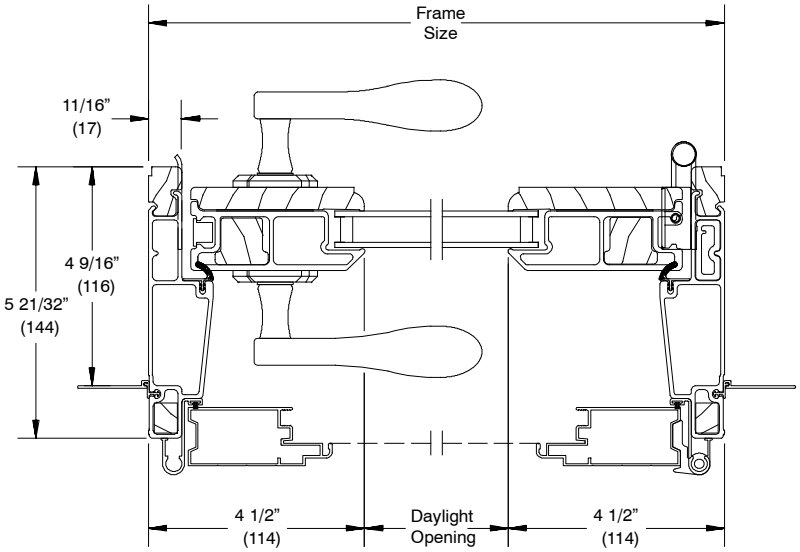

SINGLE PANEL JAMB - XR

NOTE: Swinging screen available on single panel operation X and 2 panel operation XX.

SECTION DETAILS - 4 9/16″ JAMB - STATIONARY

Scale 3″ = 1′ 0″

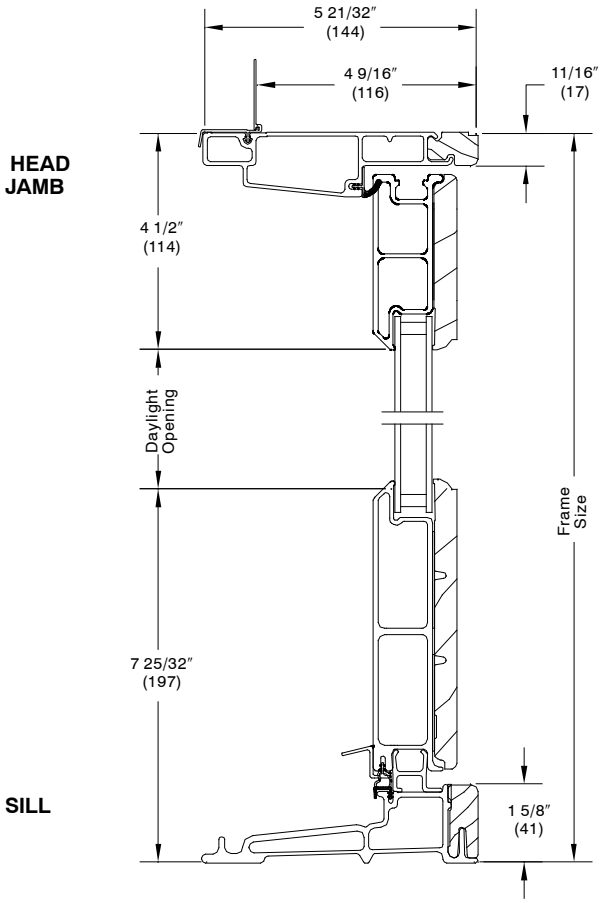

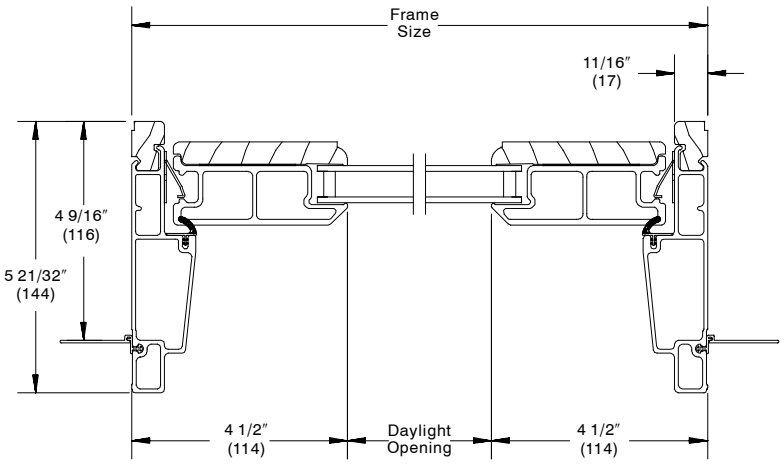

SINGLE PANEL JAMB - O STATIONARY

SECTION DETAILS - 6 9/16″ JAMB - XXR OPERATOR

Scale 3″ = 1′ 0″

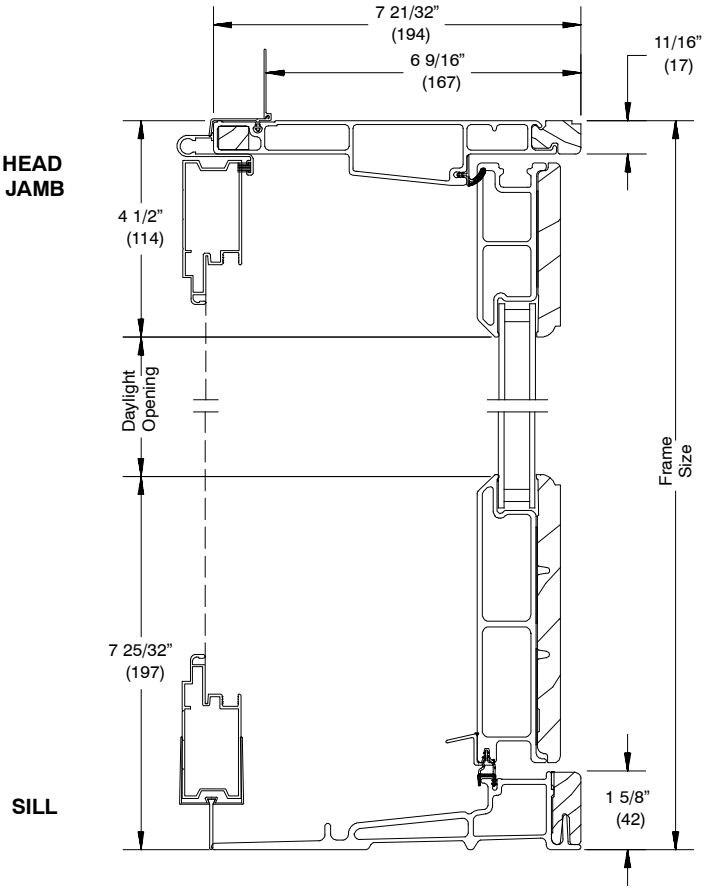

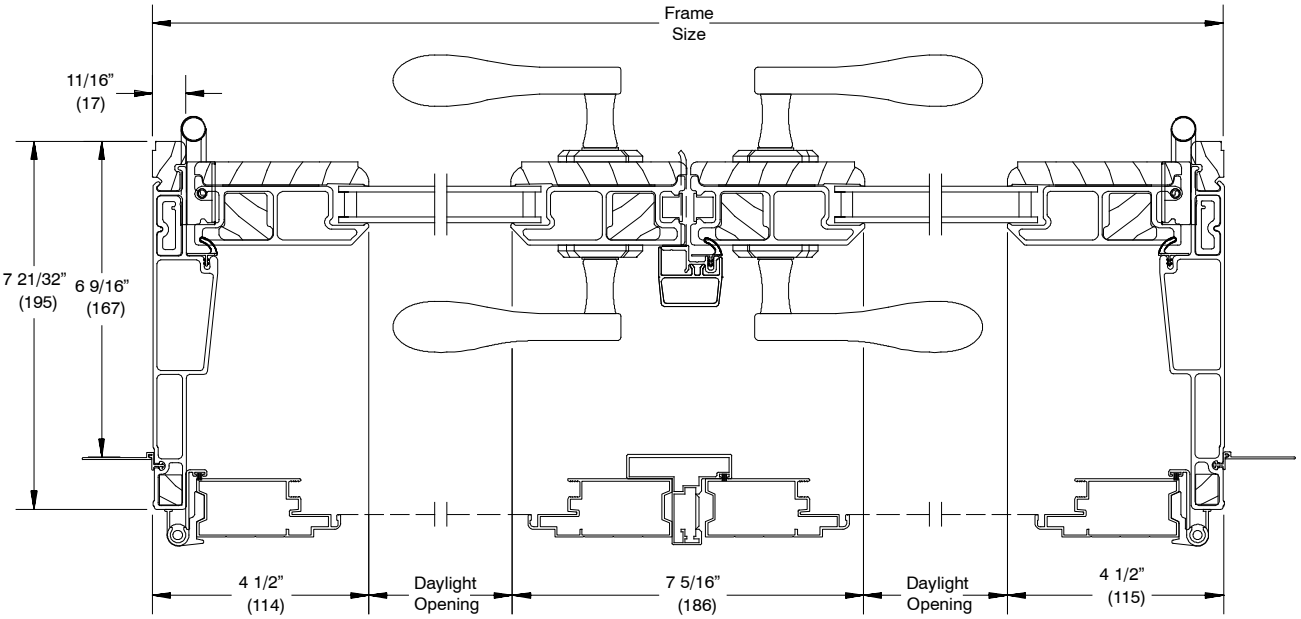

2 PANEL JAMB - XXR

SECTION DETAILS - 6 9/16″ JAMB - XO OPERATOR

Scale 3″ = 1′ 0″

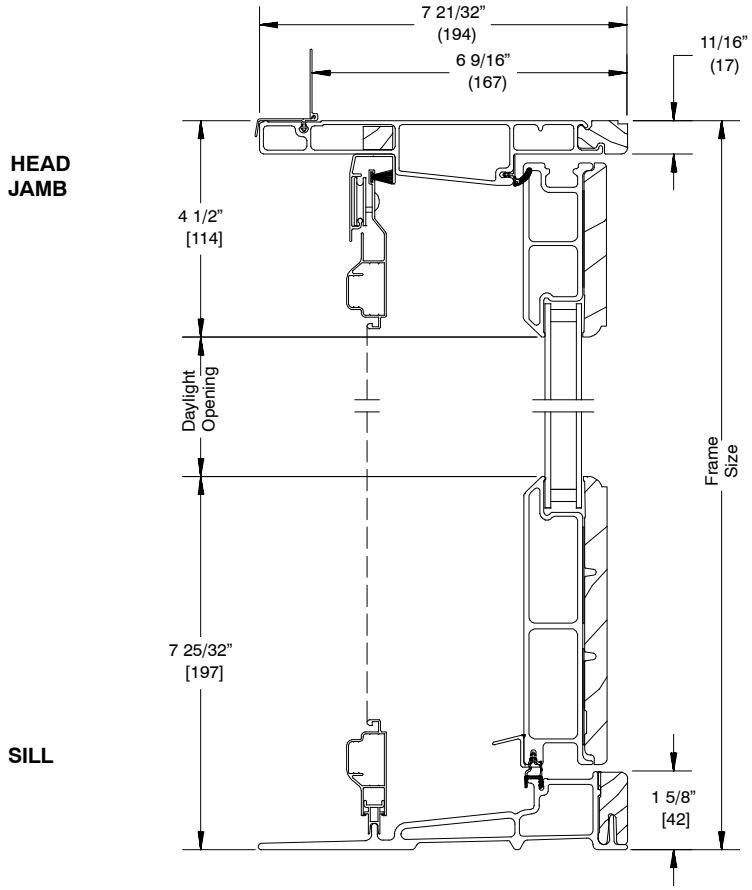

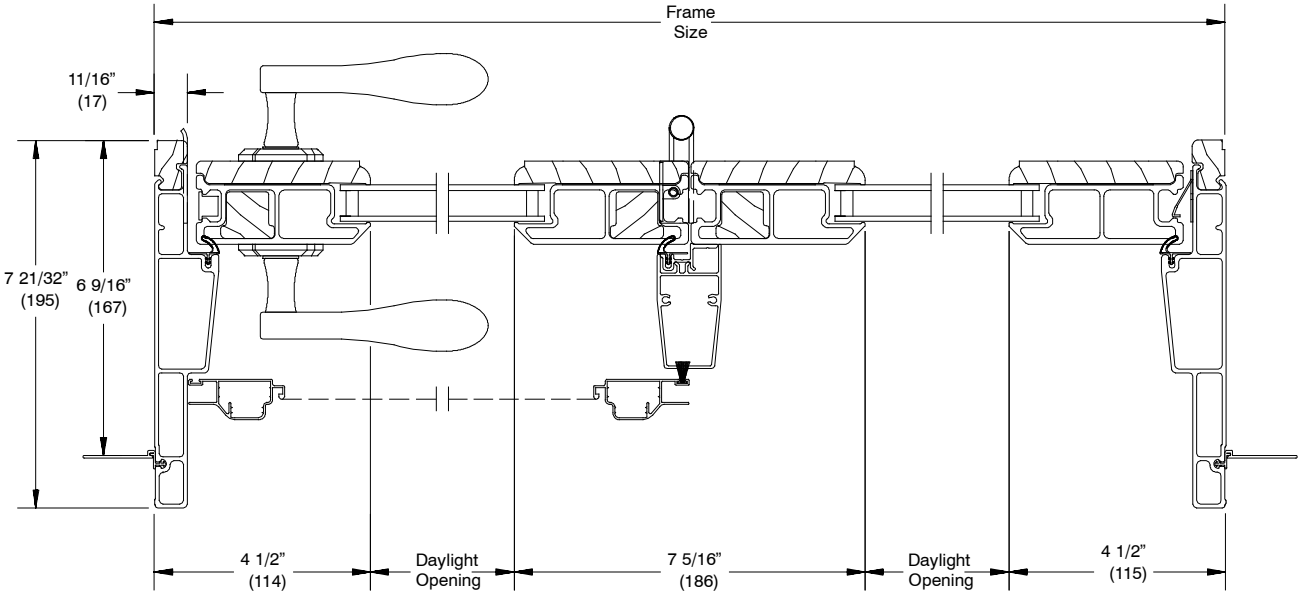

2 PANEL JAMB - XO

SECTION DETAILS - 6 9/16″ JAMB - X - OPERATOR

Scale 3″ = 1′ 0″

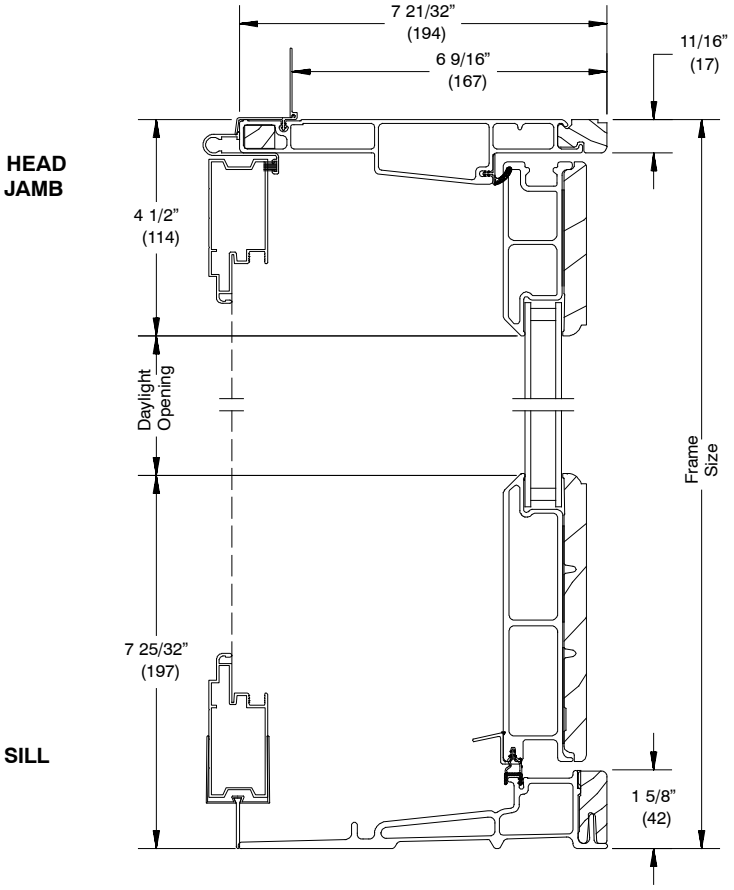

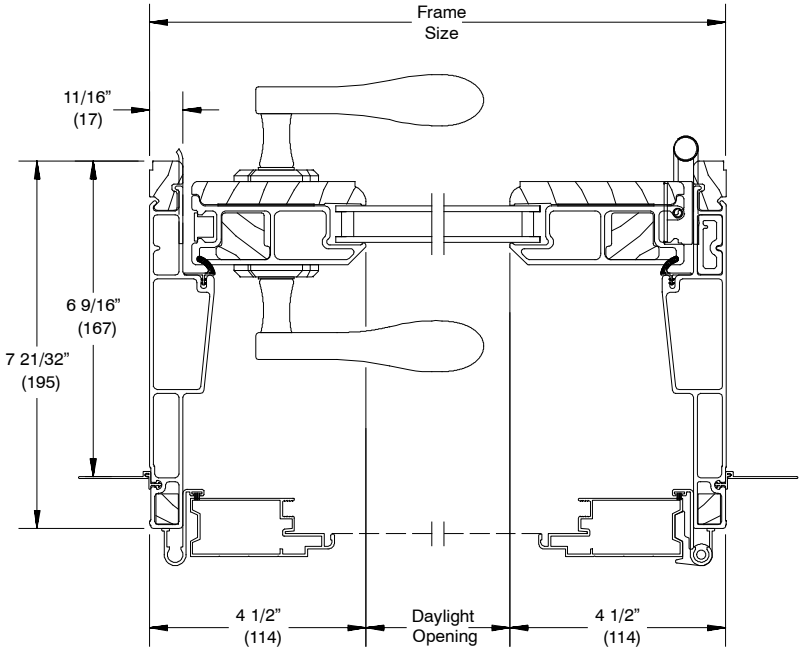

SINGLE PANEL JAMB - X R

NOTE: Swinging screen available on single panel operation X and 2 panel operation XX.

SECTION DETAILS - 6 9/16″ JAMB - STATIONARY

Scale 3″ = 1′ 0″

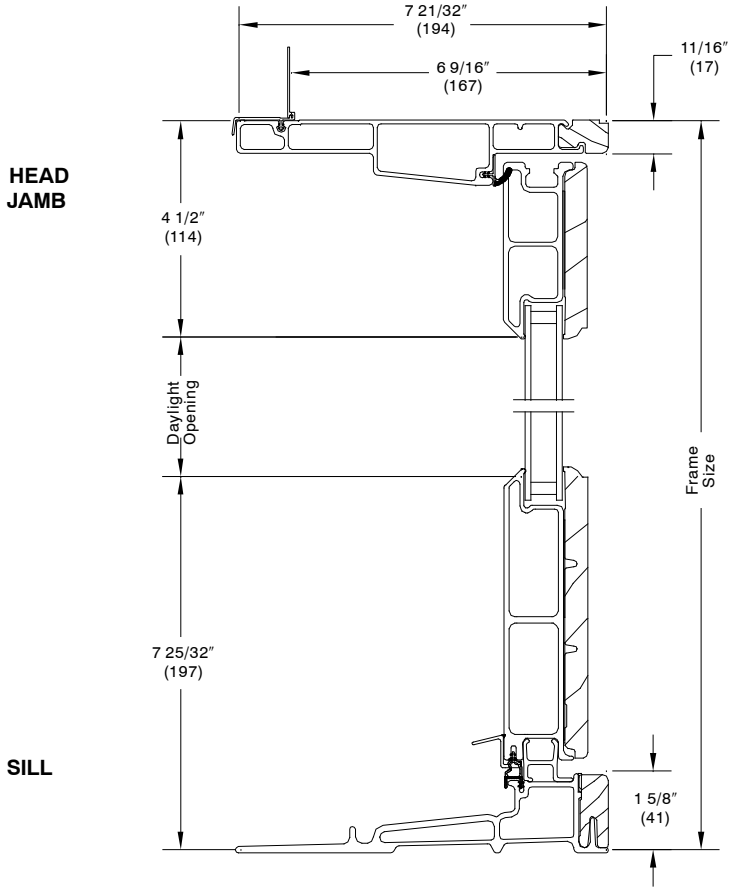

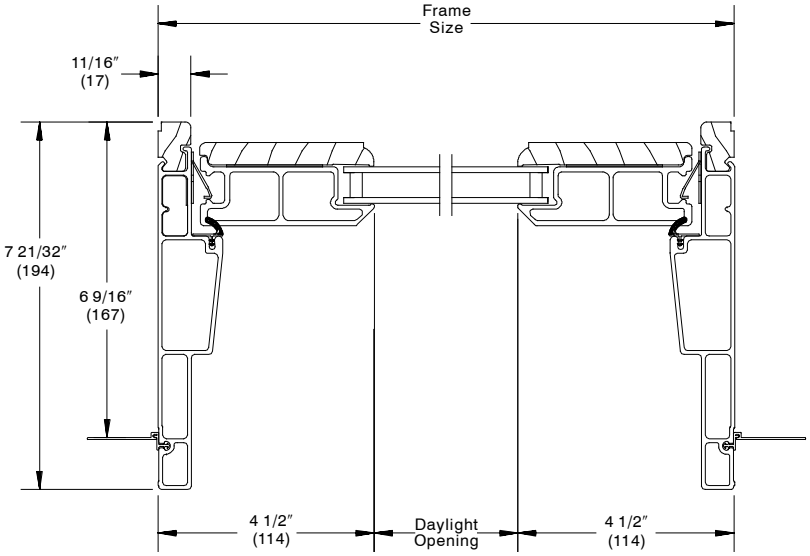

SINGLE PANEL JAMB - O STATIONARY

Scale 3″ = 1′ 0″

MULLIONS

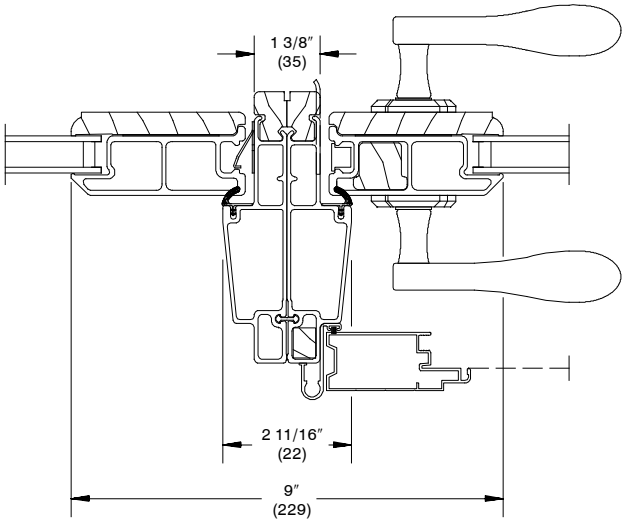

VERTICAL MULLION
O-X OPERATOR

NOT TO SCALE

DIVIDED LITE OPTIONS

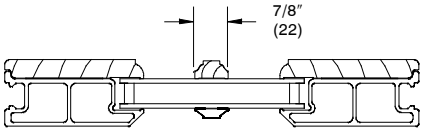

SIMULATED DIVIDED LITE

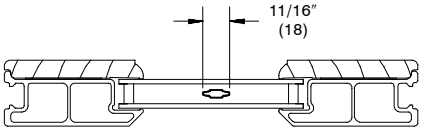

ALUMINUM GRILLE BETWEEN GLASS

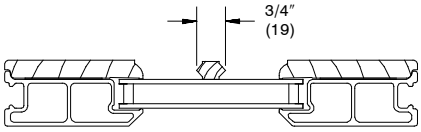

WOOD REMOVABLE GRILLE

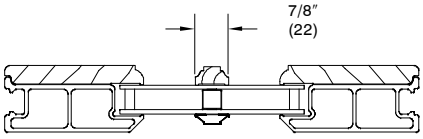

SIMULATED DIVIDED LITE
WITH SPACER BAR
(available on LoĒ³ 366® units only)

DAYLIGHT OPENING CONVERSIONS

RECTANGLE SDL
EXAMPLE SHOWN

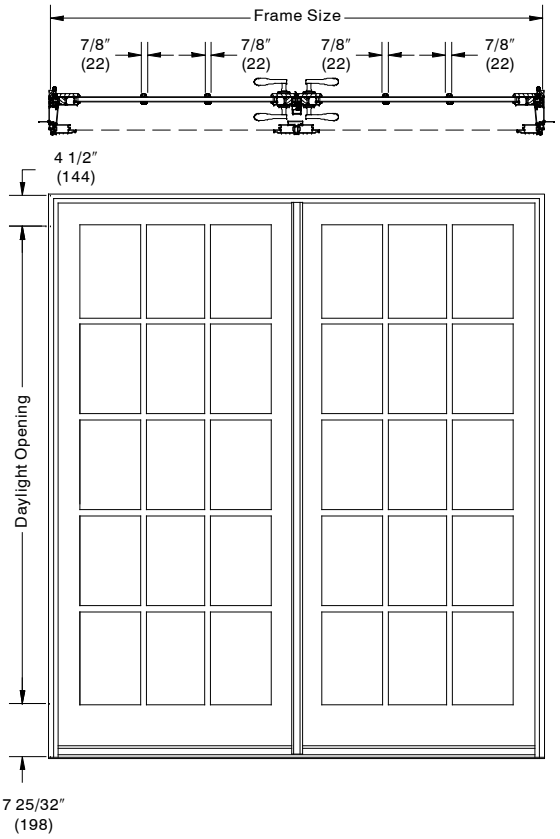

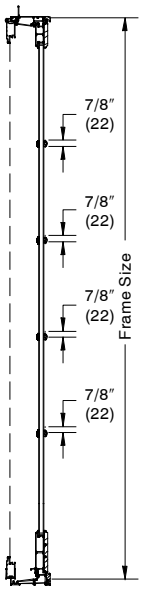

GBG or SDL
(PRAIRE SDL SHOWN)

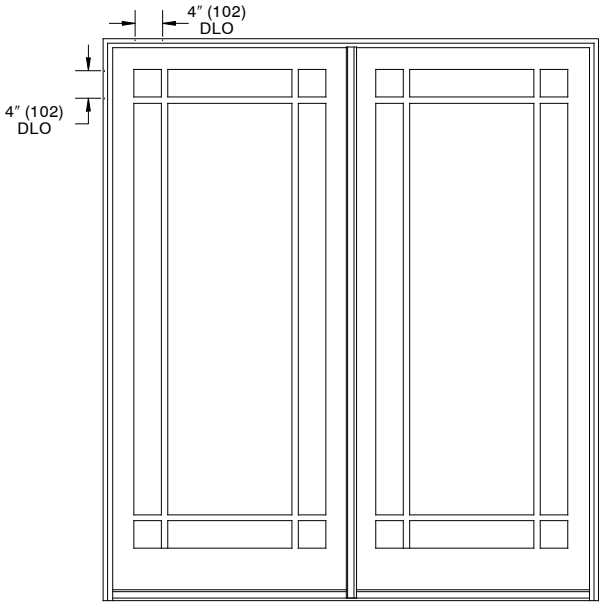

Conversion Formula:

$$\frac{\text{Total DLO - Total bar width}}{\text{Number of lites}} = \text{Individual DLO}$$

INSTALLATION SUGGESTION

INFINITY from MARVIN REPLACEMENT WINDOWS

Scale 3″ = 1′ 0″

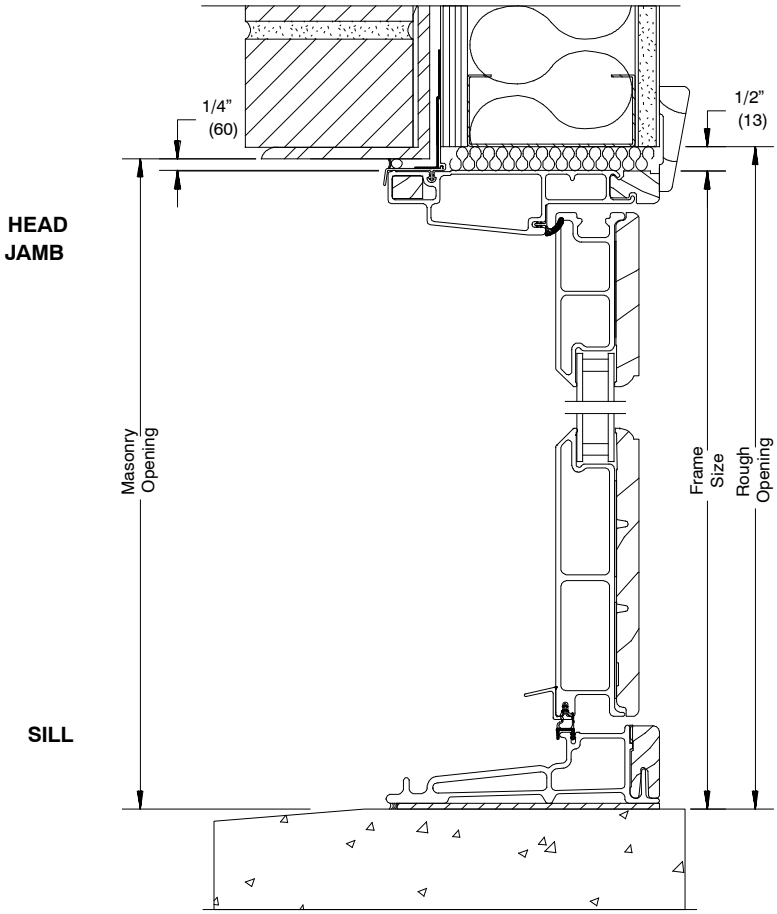

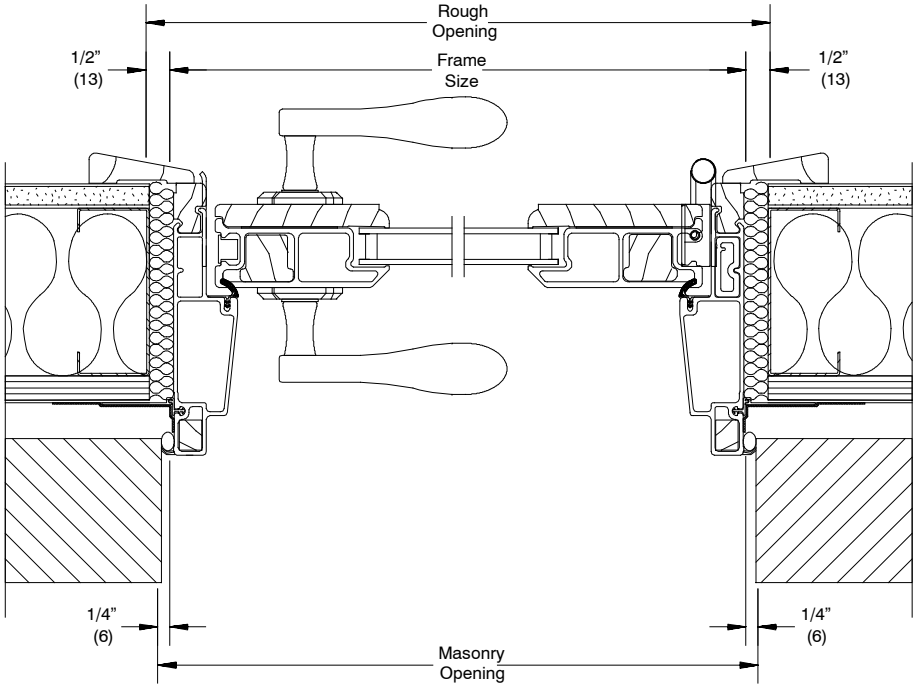

BRICK VENEER WITH STEEL FRAME CONSTRUCTION

NOTE:
The above wall sections represent typical wall conditions, these details are not intended as installation instructions. Please refer to the installation instructions provided with the purchased units.

INSTALLATION SUGGESTION

Scale 3″ = 1′ 0″

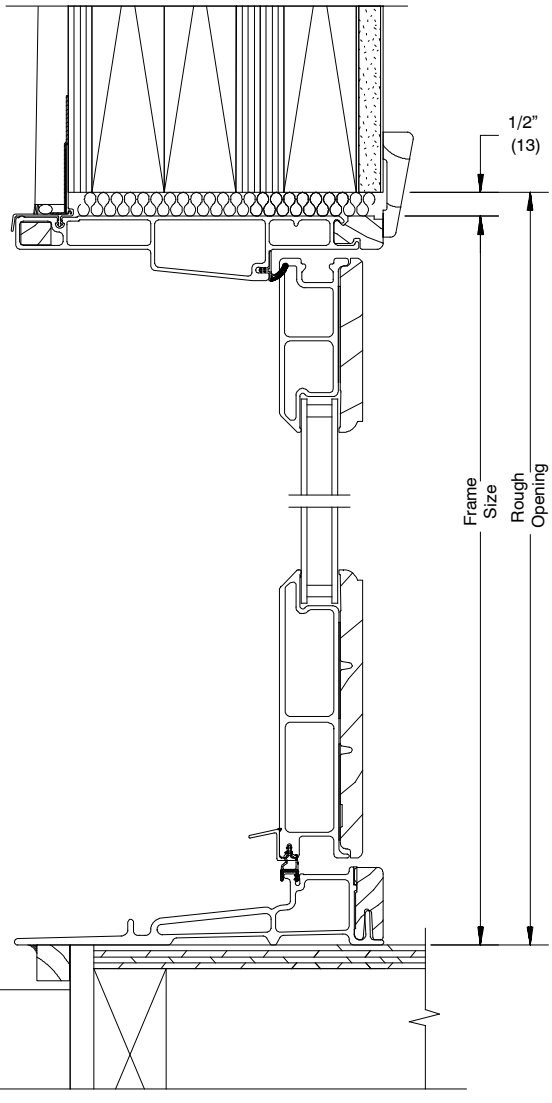

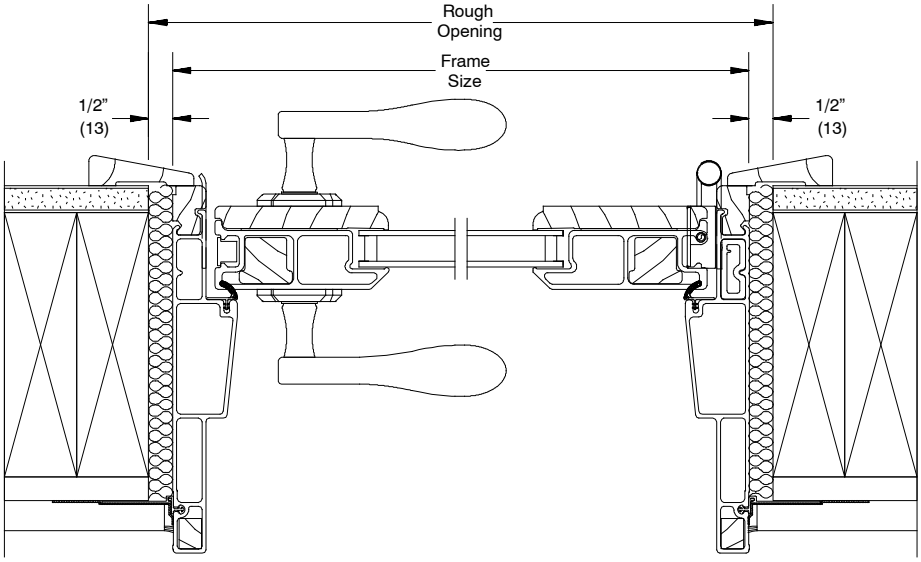

WOOD SIDING WITH 2 X 6 FRAME CONSTRUCTION

NOTE:
The above wall sections represent typical wall conditions, these details are not intended as installation instructions. Please refer to the installation instructions provided with the purchased units.

INSTALLATION SUGGESTION

Scale 3″ = 1′ 0″

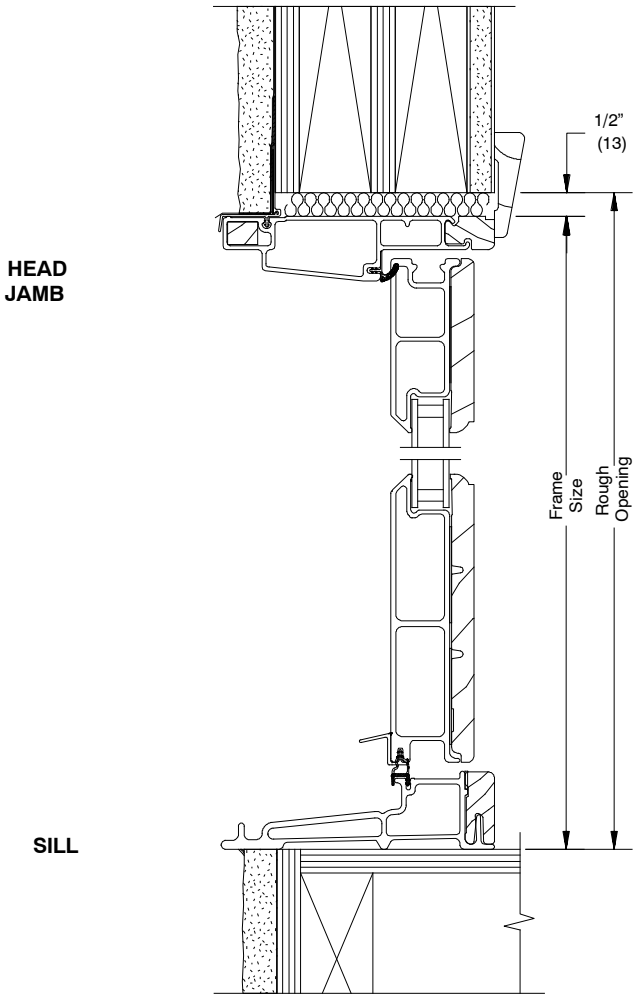

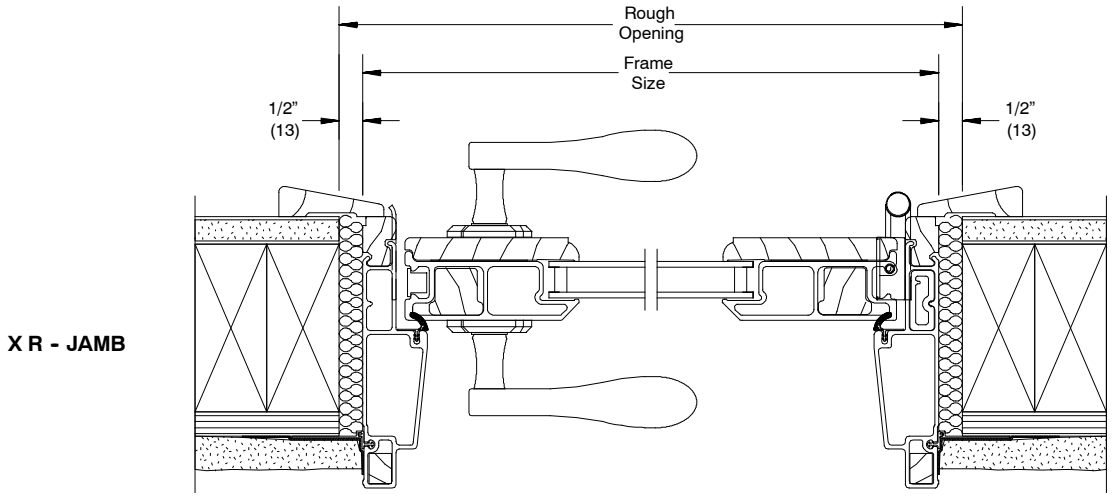

STUCCO WITH 2X4 FRAME CONSTRUCTION

NOTE:
The above wall sections represent typical wall conditions, these details are not intended as installation instructions. Please refer to the installation instructions provided with the purchased units.