TABLE OF CONTENTS

Infinity Sliding French Door

Product Specifications 11.2
Egress, Lite, and Vent Measurements 11.6
NFRC Values 11.7
Measurement Conversions / Abbreviations 11.9
Elevation 2 and 3 Panel Doors 11.10
Section Details – 4 9/16″ Jamb 11.11
Divided Lite Options 11.12
Installation Suggestions 11.13

SECTION 08 16 73
ULTREX® SLIDING FRENCH DOOR

PART 1 GENERAL

1.1 SECTION INCLUDES

A. Ultrex® [sliding door and frame] complete with hardware, glazing, weather strip, screen, [grilles-between-the-glass] and simulated divided lite.

1.2 RELATED SECTIONS

A. Section 01 33 23-Submittal Procedures: Shop Drawings, Product Data, and Samples

B. Section 01 62 00-Product Options

C. Section 01 65 00-Product Delivery

D. Section 01 66 00-Product Storage and Handling Requirements

E. Section 01 71 00-Examination and Preparation

F. Section 01 73 00-Execution

G. Section 01 74 00-Cleaning and Waste Management

H. Section 01 76 00-Protecting Installed Construction

I. Section 06 22 00-Millwork: Wood trim other than furnished by door and frame manufacturer

J. Section 07 92 00-Joint Sealants: Sill sealant and perimeter caulking

K. Section 08 71 00-Door Hardware: Hardware other than furnished by door and frame manufacturer

L. Section 09 90 00-Paints and Coatings: Paint or stain other than factory applied finish

1.3 REFERENCES

A. American Society for Testing and Materials (ASTM):

1. E 283: Standard Test Method for Rate of Air Leakage Through Exterior Windows, Curtain Walls, and Doors.
2. E 330: Standard Test Method for Structural Performance of Exterior Windows, Curtains Walls, and Doors by Uniform Static Air Pressure Difference.
3. E 547: Standard Test Method for Water Penetration of Exterior Windows, Curtain Walls, and Doors by Cyclic Static Air Pressure Differential.
4. E 2190: Specification for Sealed Insulated Glass Units.

B. C 1036: Standard Specification for Flat Glass. American Architectural Manufacturers Association / Window and Door Manufactures Association (AAMA / WDMA):101 / I.S.2-97: Voluntary Specifications for Aluminum, Vinyl (PVC) and Wood Windows and Glass Doors, 101/I.S.2/NAFS-02 Voluntary Performance Specification for Windows, Skylights and Glass Doors and 101/I.S.2/A440-05 Standard/Specification for windows, doors, and unit skylights.

C. Window and Door Manufactures Association (WDMA): Hallmark Certification Program.

D. Sealed Insulating Glass Manufactures Association / Insulating Glass Certification Council (SIGMA / IGCC).

E. American Architectural Manufacturers Association (AAMA) AAMA 613-02: Voluntary Performance Requirements and Test Procedures for Organic Coating on Plastic Profiles.

F. National Fenestration Rating Council (NFRC): 100-2004: Procedure for Determining Fenestration Product Thermal Properties.

1.4 SYSTEM DESCRIPTION

A. Design and Performance Requirements:

1. Units shall be designed to comply with 101/I.S.2-97 and 101/I.S. 2/NAFS-02 (SGD-R40) rating and 101/I.S.2/A440-05 (SD-R40).
2. Air leakage shall not exceed 0.30 cfm per square foot of frame when tested at 1.57 psf according to ASTM E 283.
3. No water penetration when tested at 6.0 psf according to ASTM E 547.
4. Units shall be designed to comply with ASTM E330 for structural performance when tested at the following pressures: (+/-60 Psf)

1.5 SUBMITTALS

A. Shop Drawings: Submit shop drawings under provisions of Section 01 33 23.

B. Product Data: Submit catalog data under provisions of Section 01 33 23.

C. Samples:

1. Submit corner section under provisions of Section 01 33 23.
2. Include glazing system, quality of construction, and specified finish.

D. Quality Control Submittals: Certificates: Submit manufacturer's certifications indicating compliance with specified performance and design requirements under provisions of Section 01 33 23.

1.6 QUALITY ASSURANCE

A. Regulatory Requirements: Emergency Egress or Rescue: Comply with requirements for sleeping units of [IBC International Building Code] [BOCA Basic Building Code] [Southern Building Code] [Uniform Building Code] [_____].

1.7 DELIVERY

A. Comply with provisions of Section 01 65 00.

B. Deliver in original packaging and protect from weather.

1.8 STORAGE AND HANDLING

A. Store door panels upright on a level surface in a clean and dry storage area under provisions of Section 01 66 00.

1.9 WARRANTY

A. Doors shall be warranted to be free from defects in manufacturing, materials, and workmanship for a period of ten (10) years from purchase date.

B. Door glass shall be warranted to be free from defects in manufacturing, materials and workmanship for a period of twenty (20) years from purchase date.

PART 2 PRODUCTS

2.1 MANUFACTURED UNITS

A. Description: Factory assembled Ultrex® Sliding French Door, as manufactured by Infinity Windows and Doors, West Fargo, North Dakota.

2.2 ULTREX® SLIDING FRENCH DOOR MATERIALS

A. Frame: Exterior: Fiberglass reinforced pultrusion (Ultrex®) 0.080 inch (2 mm) thick. Composite frame thickness: 1-7/32 inches (31 mm). Frame depth: 4-9/16 inches (116 mm). Beige fiberglass reinforced pultrusion (Ultrex®) sill with color matched interior sill liner.

B. Panel: Fiberglass reinforced pultrusion (Ultrex®) 0.110 inch (2.8 mm) thick. Composite panel thickness: 1-3/4 inches (44mm). Ultrex® panel corners have corner keys and sealant injection. Stile dimensions: 3-5/8 inches (92 mm). Rail dimensions: top rail 3-5/8 inches (92 mm), bottom rail 6 inches (152 mm).

C. Glazing: Select quality complying with ASTM C 1036. Insulating glass IGCC certified to ASTM E 2190.

1. Glazing method: [Insulating glass] [Altitude adjusted]
2. Glass type:
   [LoĒ-179™ with Argon gas Tempered]
   [LoĒ-179 with Argon gas Tempered Obscured]
   [LoĒ^{2}-272® with Argon gas Tempered]
   LoĒ^{2}-272 with Argon gas Tempered Obscured]
   [LoĒ^{3}-366® with Argon gas Tempered]
   [LoĒ^{3}-366 with Argon gas Tempered Obscured]
3. Glazing seal: Silicone bedding on interior; silicone bedding on exterior.

D. Select quality complying with ASTM C 1036. Shall comply with 16 CFR 1201 Safety Standard for Architectural Glazing Materials. Insulating glass SIGMA/IGCC certified to ASTM E 2190.

E. Simulated Divided Lites (SDL): 7/8 inch (22mm) wide with internal aluminum spacer bars. Exterior bar: Ultrex®, finish to match exterior [Stone White] [Sierra] [Pebble Gray] [Bronze] [Cashmere] [Bahama Brown]. Interior bar: ABS (Acrylonitrile Butadiene Styrene) [Stone White] [Sierra] PVC [EverWood™]. Patterns available: Equal Rectangle Lites, Prairie in 4, 6, and 9 lite patterns, cottage, oriel, checkrail.

F. Grilles Between the Glass: 11/16 inch by 7/32 inch (17 mm by 6 mm) profiled aluminum spacer between glass panes. Exterior Finish: [Stone White] [Sierra] [Pebble Gray] [Bronze] [Cashmere] [Bahama Brown]. Interior Finish: [Stone White] [Satin Taupe] [Sierra] [Bronze]. Patterns available: Equal Rectangle Lites, Prairie in 4, 6, and 9 lite patterns, cottage, oriel, checkrail.

G. Finish

1. Exterior: Ultrex®, a fiberglass reinforced pultrusion with co-extruded Acrylic finish. Color: [Stone White] [Sierra] [Pebble Gray] [Bronze] [Cashmere] [Bahama Brown].
2. Interior: Ultrex®, a fiberglass reinforced pultrusion with co-extruded Acrylic finish. Color: [Stone White] [Sierra] [EverWood™].

H. Hardware:

1. Multi-point locking system: Keyed and keyed alike
2. Handle Set: Interior and Exterior selected separatly. Polyester powder coat finish on zinc die cast [White] [Satin Taupe] [Sierra]. PVD finish on nickel/chrome plated brass forgings [Brass PVD] [Stain Nickel PVD] [Oil Rubbed Bronze PVD].
3. Rollers: Two adjustable steel rollers assemblies per operating panel. Two ball bearing wheels per toller assembly. Maximum vertical adjustment: 5/16 inch (8mm).
4. Foot Bolt: Color: [White] [Beige]

I. Weather strip: PVC weather strip along head jamb and jamb, Santoprene sill weather strip to seal against the Ultrex® bottom rail and panel drip, Full length panel PVC interlocks on the meeting stiles, ultraviolet and wear resistant contact surface. Color: Beige.

J. Insect Screens

1. Sliding screen for 2 panel door: Extruded aluminum sliding frame 0.045 inch (1.2 mm) thick. Top hung roller assembly with stainless steel ball bearings in nylon wheels, top rollers adjustable up to 3/8 inch (10 mm). Frame to have edge mounted wool pile bug strip.
2. Screen cloth [18 inch by 16 inch mesh: Charcoal Fiberglass] [20 x 20 mesh: Charcoal High Transparency Fiberglass].
3. Frame Finish: Stone White; Sierra; Pebble Gray; Bronze; Cashmere; Bahama Brown.
4. Flush mounted ridged nylon handle.

K. Installation Accessories:

1. Factory installed nailing fin at head and side jambs.
2. Structural Brackets: 6 inches (152 mm); 10 inches (254 mm)

PART 3 EXECUTION

3.1 EXAMINATION

A. Verification of Conditions: Before Installation, verify openings are plumb, square, and of proper dimension as required in Section 01 71 00. Report frame defects or unsuitable conditions to the General Contractor before proceeding.

B. Acceptance of Conditions: Beginning of installation confirms acceptance of existing conditions.

3.2 INSTALLATION

A. Comply with Section 01 73 00.

B. Assemble and install doors and frames according to manufacturer's instructions and reviewed shop drawings.

C. Set door sills in full bed of sealant; install backing material and sealant at head and side jambs, and as specified in Section 07 92 00. Do not use expansive foam sealant.

D. Install frames and stationary panels as required.

E. Install sill support before using door.

F. Keeper and operator stop blocks must be installed.

G. Install accessory items as required.

H. Use finish nails to apply wood trim and mouldings.

3.3 STARTING AND ADJUSTING

A. Adjust door to work freely with hardware functioning properly. Re-adjust at completion of project if directed.

3.4 CLEANING

A. Remove visible labels and adhesive residue according to manufacturer's instructions.

B. Leave doors and glass in a clean condition. Final cleaning as required in Section 01 74 00.

3.5 PROTECTING INSTALLED CONSTRUCTION

A. Comply with Section 01 76 00.

B. Cover doors and frames during painting or other construction operations that may cause damage.

C. Protect sill from damage by chemicals, solvents, paint, or construction traffic.

END OF SECTION

EGRESS, LITE AND VENT MEASUREMENTS

EGRESS, LITE, AND VENT MEASUREMENTS								
	UNIT #	DAYLIGHT OPENING PER PANEL WIDTH	DAYLIGHT OPENING PER PANEL HEIGHT	LITE Sq. ft	VENT Sq. ft	EGRESS WIDTH	EGRESS HEIGHT	EGRESS Sq. ft
SLIDING FRENCH DOOR								
2 PANEL	5065	22 3/8″	67 3/32″	20.85	12.16	23.32	75.10	12.16
	6065	28 3/8″	67 3/32″	26.44	15.29	29.32	75.10	15.29
	5068	22 3/8″	69 19/32″	21.63	12.57	23.32	77.60	12.57
	6068	28 3/8″	69 19/32″	27.43	15.80	29.32	77.60	15.80
	8065	40 3/8″	67 3/32″	37.63	21.55	41.32	75.10	21.55
	8068	40 3/8″	69 19/32″	39.03	22.27	41.32	77.60	22.27
3 PANEL	9065	28 3/8″	67 3/32″	39.66	15.29	29.32	75.10	15.29
	9068	28 3/8″	69 19/32″	41.14	15.80	29.32	77.60	15.80

EGRESS MEASUREMENTS

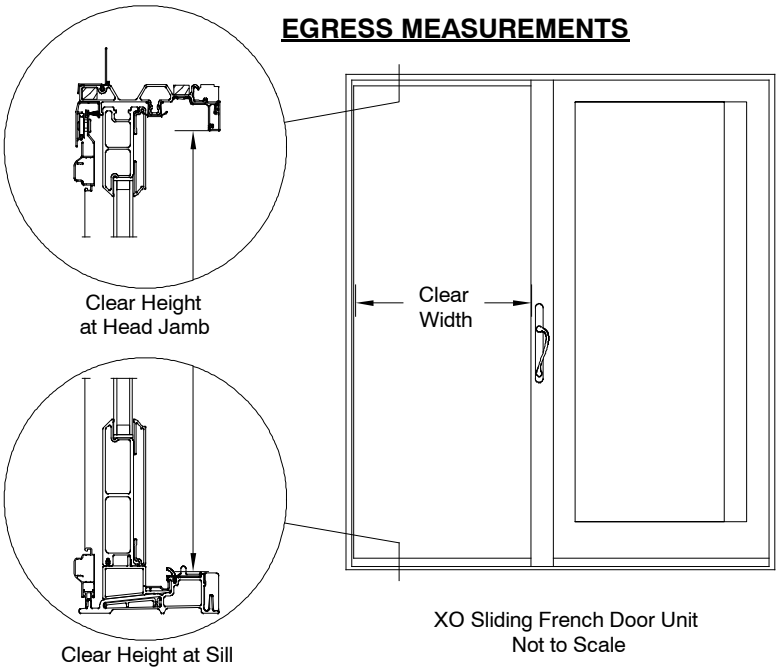

XO Sliding French Door Unit
Not to Scale

International Building Code - 2006

For Specific Guidelines refer to codes:
IBC 2006 Section 1008
and
IRC 2006 Section 310

Code restrictions may vary depending on your local building codes. For further information contact your Infinity representative.

NFRC VALUES

INFINITY from MARVIN
REPLACEMENT WINDOWS

THERMAL PERFORMANCE VALUES Infinity Sliding French Door 3.0 mm Size Tested 79 x 79 (2007 x 2007)					
ENERGY DATA	**U-Value**	**R-Value**	**SHGC**	**VLT**	**Energy Star**
Insulating Glass LoĒ 179™ - Air	0.34	2.94	0.48	0.54	
Insulating Glass LoĒ 179 - Argon	0.31	3.23	0.49	0.54	
Insulating Glass LoĒ 179 - Air GBG	0.34	2.94	0.42	0.47	
Insulating Glass LoĒ 179 - Argon GBG	0.31	3.23	0.43	0.47	
Insulating Glass LoĒ 179 - Air SDL	0.34	2.94	0.42	0.47	
Insulating Glass LoĒ 179 - Argon SDL	0.31	3.23	0.43	0.47	
Insulating Glass LoĒ 179 - Air Obscure	0.34	2.94	0.48	0.54	
Insulating Glass LoĒ 179 - Argon Obscure	0.31	3.23	0.49	0.54	
Insulating Glass LoĒ 179 - Air GBG Obscure	0.34	2.94	0.42	0.47	
Insulating Glass LoĒ 179 - Argon GBG Obscure	0.31	3.23	0.43	0.47	
Insulating Glass LoĒ 179 - Air SDL Obscure	0.34	2.94	0.42	0.47	
Insulating Glass LoĒ 179 - Argon SDL Obscure	0.31	3.23	0.43	0.47	
Insulating Glass LoĒ^2 272® - Air	0.33	3.03	0.29	0.50	
Insulating Glass LoĒ^2 272 - Argon	0.29	3.45	0.29	0.50	Complies
Insulating Glass LoĒ^2 272 - Air GBG	0.33	3.03	0.26	0.43	
Insulating Glass LoĒ^2 272 - Argon GBG	0.29	3.45	0.26	0.43	Complies
Insulating Glass LoĒ^2 272 - Air SDL	0.34	2.94	0.26	0.43	
Insulating Glass LoĒ^2 272 - Argon SDL	0.31	3.23	0.26	0.43	Complies
Insulating Glass LoĒ^2 272 - Air Obscure	0.33	3.03	0.29	0.50	
Insulating Glass LoĒ^2 272 - Argon Obscure	0.29	3.45	0.29	0.50	Complies
Insulating Glass LoĒ^2 272 - Air GBG Obscure	0.33	3.03	0.26	0.43	
Insulating Glass LoĒ^2 272 - Argon GBG Obscure	0.29	3.45	0.26	0.43	Complies
Insulating Glass LoĒ^2 272 - Air SDL Obscure	0.34	2.94	0.26	0.43	
Insulating Glass LoĒ^2 272 - Argon SDL Obscure	0.31	3.23	0.26	0.43	Complies
Insulating Glass LoĒ^3 366® - Air	0.32	3.13	0.20	0.45	Complies
Insulating Glass LoĒ^3 366 - Argon	0.29	3.45	0.19	0.45	Complies
Insulating Glass LoĒ^3 366 - Air GBG	0.32	3.13	0.17	0.39	Complies
Insulating Glass LoĒ^3 366 - Argon GBG	0.29	3.45	0.17	0.39	Complies
Insulating Glass LoĒ^3 366 - Air SDL	0.33	3.03	0.17	0.39	
Insulating Glass LoĒ^3 366 - Argon SDL	0.30	3.33	0.17	0.39	Complies
Insulating Glass LoĒ^3 366 - Air Obscure	0.32	3.13	0.20	0.45	Complies
Insulating Glass LoĒ^3 366 - Argon Obscure	0.29	3.45	0.19	0.45	Complies
Insulating Glass LoĒ^3 366 - Air GBG Obscure	0.32	3.13	0.17	0.39	Complies
Insulating Glass LoĒ^3 366 - Argon GBG Obscure	0.29	3.45	0.17	0.39	Complies
Insulating Glass LoĒ^3 366 - Air SDL Obscure	0.33	3.03	0.17	0.39	
Insulating Glass LoĒ^3 366 - Argon SDL Obscure	0.30	3.33	0.17	0.39	Complies

Product Values are determined using the National Fenestration Rating Council Procedures fro determining fenestration product values.

U-Value: (Btu/hr-sq. ft-*F) Lower the U-value, the greater the resistance to heat flow and better its insulating value.

R-Value: (1/U-Value) Higher the R-Value, the greater the resistance to heat flow and better its insulating value.

VLT: Visible Light Transmittance - Percentage of visible light transmitted through the unit.

SHGC: Solar Heat Gain Coefficient: The lower a window's SHGC , the less solar heat it transmits, and the greater it's shading ability.

NFRC VALUES

INFINITY from MARVIN
REPLACEMENT WINDOWS

THERMAL PERFORMANCE VALUES Infinity Sliding French Door 4.0 mm Size Tested 79 x 79 (2007 x 2007)					
ENERGY DATA	**U-Value**	**R-Value**	**SHGC**	**VLT**	**Energy Star**
Insulating Glass LoĒ 179™ - Air	0.34	2.94	0.47	0.54	
Insulating Glass LoĒ 179 - Argon	0.31	3.23	0.47	0.54	
Insulating Glass LoĒ 179 - Air GBG	0.34	2.94	0.41	0.47	
Insulating Glass LoĒ 179 - Argon GBG	0.31	3.23	0.41	0.47	
Insulating Glass LoĒ 179 - Air SDL	0.34	2.94	0.41	0.47	
Insulating Glass LoĒ 179 - Argon SDL	0.31	3.23	0.41	0.47	
Insulating Glass LoĒ 179 - Air Obscure	0.34	2.94	0.47	0.54	
Insulating Glass LoĒ 179 - Argon Obscure	0.31	3.23	0.47	0.54	
Insulating Glass LoĒ 179 - Air GBG Obscure	0.34	2.94	0.41	0.47	
Insulating Glass LoĒ 179 - Argon GBG Obscure	0.31	3.23	0.41	0.47	
Insulating Glass LoĒ 179 - Air SDL Obscure	0.34	2.94	0.41	0.47	
Insulating Glass LoĒ 179 - Argon SDL Obscure	0.31	3.23	0.41	0.47	
Insulating Glass LoĒ^2 272® - Air	0.33	3.03	0.29	0.49	
Insulating Glass LoĒ^2 272 - Argon	0.29	3.45	0.29	0.49	Complies
Insulating Glass LoĒ^2 272 - Air GBG	0.34	2.94	0.26	0.43	
Insulating Glass LoĒ^2 272 - Argon GBG	0.30	3.33	0.25	0.43	Complies
Insulating Glass LoĒ^2 272 - Air SDL	0.34	2.94	0.26	0.43	
Insulating Glass LoĒ^2 272 - Argon SDL	0.30	3.33	0.25	0.43	Complies
Insulating Glass LoĒ^2 272 - Air Obscure	0.33	3.03	0.29	0.49	
Insulating Glass LoĒ^2 272 - Argon Obscure	0.29	3.45	0.29	0.49	Complies
Insulating Glass LoĒ^2 272 - Air GBG Obscure	0.34	2.94	0.26	0.43	
Insulating Glass LoĒ^2 272 - Argon GBG Obscure	0.30	3.33	0.25	0.43	Complies
Insulating Glass LoĒ^2 272 - Air SDL Obscure	0.34	2.94	0.26	0.43	
Insulating Glass LoĒ^2 272 - Argon SDL Obscure	0.30	3.33	0.25	0.43	Complies
Insulating Glass LoĒ^3 366® - Air	0.32	3.13	0.20	0.44	Complies
Insulating Glass LoĒ^3 366 - Argon	0.29	3.45	0.19	0.44	Complies
Insulating Glass LoĒ^3 366 - Air GBG	0.33	3.03	0.18	0.38	
Insulating Glass LoĒ^3 366 - Argon GBG	0.30	3.33	0.17	0.38	Complies
Insulating Glass LoĒ^3 366 - Air SDL	0.33	3.03	0.18	0.38	
Insulating Glass LoĒ^3 366 - Argon SDL	0.30	3.33	0.17	0.38	Complies
Insulating Glass LoĒ^3 366 - Air Obscure	0.32	3.13	0.20	0.44	Complies
Insulating Glass LoĒ^3 366 - Argon Obscure	0.29	3.45	0.19	0.44	Complies
Insulating Glass LoĒ^3 366 - Air GBG Obscure	0.33	3.03	0.18	0.38	
Insulating Glass LoĒ^3 366 - Argon GBG Obscure	0.30	3.33	0.17	0.38	Complies
Insulating Glass LoĒ^3 366 - Air SDL Obscure	0.33	3.03	0.18	0.38	
Insulating Glass LoĒ^3 366 - Argon SDL Obscure	0.30	3.33	0.17	0.38	Complies

Product Values are determined using the National Fenestration Rating Council Procedures fro determining fenestration product values.

U-Value: (Btu/hr-sq. ft-*F) Lower the U-value, the greater the resistance to heat flow and better its insulating value.

R-Value: (1/U-Value) Higher the R-Value, the greater the resistance to heat flow and better its insulating value.

VLT: Visible Light Transmittance - Percentage of visible light transmitted through the unit.

SHGC: Solar Heat Gain Coefficient: The lower a window's SHGC , the less solar heat it transmits, and the greater it's shading ability.

MEASUREMENT CONVERSIONS AND ABBREVIATIONS

MEASUREMENT CONVERSIONS				
ROUGH OPENING TO	**WIDTH**		**HEIGHT**	
SLIDING FRENCH DOOR 2 Panel	**Imperial**	**Metric**	**Imperial**	**Metric**
Masonry Opening	-1/2″	- 13 mm	- 1/4″	- 6 mm
OM of Frame	-1″	- 25 mm	- 1/2″	- 13 mm
OM of Panel	(÷ 2) - 3/8″	(÷ 2) - 10 mm	-3 9/32″	- 84 mm
Daylight Opening	(÷ 2) - 7 5/8″	(÷ 2) - 194 mm	- 12 29/32″	- 328 mm
OM of Glass	(÷ 2) - 6 7/16″	(÷ 2) - 164 mm	- 11 23/32″	- 298 mm
OM of Screen	(÷ 2) - 13/16″	(÷ 2) - 21 mm	- 2 1/4″	- 57 mm
SLIDING FRENCH DOOR 3 Panel				
Masonry Opening	- 1/2″	- 13 mm	- 1/4″	- 6 mm
OM of Frame	- 1″	- 25 mm	- 1/2″	- 13 mm
OM of Panel	(÷ 3) - 7/32″	(÷ 3) - 5 mm	- 3 9/32″	- 84 mm
Daylight Opening	(÷ 3) - 7 7/16″	(÷ 3) - 190 mm	- 12 29/32″	- 328 mm
OM of Glass	(÷ 3) - 6 9/32″	(÷ 3) - 159 mm	- 11 23/32″	- 298 mm
OM of Screen	(÷ 3) -21/32″	(÷ 3) - 16 mm	- 2 1/4″	- 57 mm

ABBREVIATIONS

FS = Frame Size
GBG = Grille Between Glass
NSFD = Infinity Sliding French Door
L = Left Handed
MO = Masonry Opening
mm = Millimeters
O = Stationary
OM = Outside Measurement
R = Right Handed
RO = Rough Opening
SDL = Simulated Divided Lite
Sq. ft = Square feet
X = Operating

SLIDING FRENCH DOOR

ELEVATION 2 AND 3 PANEL DOORS

NOT TO SCALE

Mas. Opg.	4-11 1/2 (1511)	5-11 1/2 (1816)	7-11 1/2 (2426)	8-11 (2718)
Rgh. Opg.	5-0 (1524)	6-0 (1829)	8-0 (2438)	8-11 1/2 (2731)
Frame Size	4-11 (1499)	5-11 (1803)	7-11 (2413)	8-10 1/2 (2705)
Glass Size	23 9/16″ (598)	29 9/16″ (751)	41 9/16″ (1056)	29 9/16″ (751)

6-7 3/4 (2026)
6-8 (2032)
6-7 1/2 (2019)
68 9/32″ (1734)

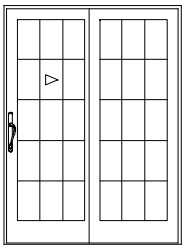

NSFD5065

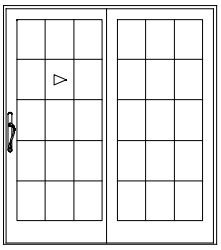

NSFD6065

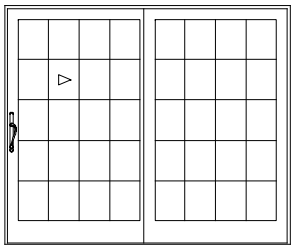

NSFD8065

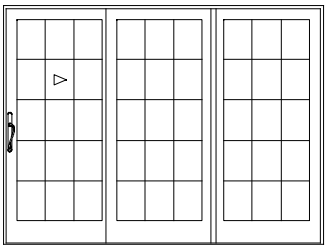

NSFD9065

6-10 1/4 (2089)
6-10 1/2 (2096)
6-10 (2083)
70 25/32″ (1798)

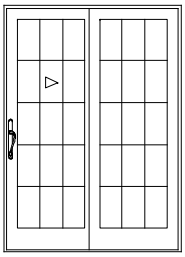

NSFD5068

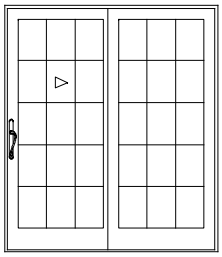

NSFD6068

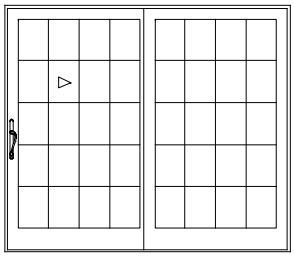

NSFD8068

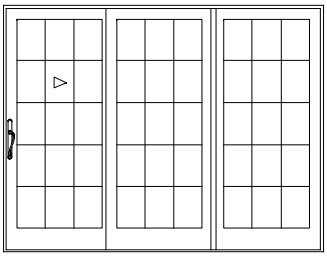

NSFD9068

OPERATION

2 Panel Units

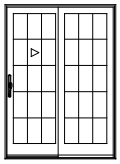

XO

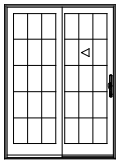

OX

3 Panel Units

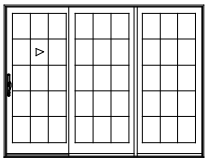

XOO

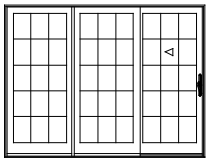

OOX

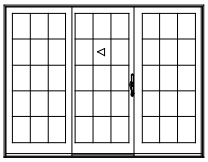

OXO

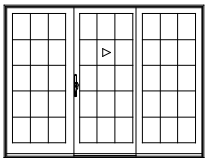

OXO

NOTE:
One lite is standard, elevations are shown with rectangular lite pattern. Round top transoms available for field assembly, refer to round top chapter. Imperial and metric dimensions are shown metric dimensions are in millimeters. Equal lite cuts also available.

O = Stationary Panel
X = Operating Panel

All units viewed from exterior.

SLIDING FRENCH DOOR

SECTION DETAILS - 4 9/16″ JAMBS

Not to Scale

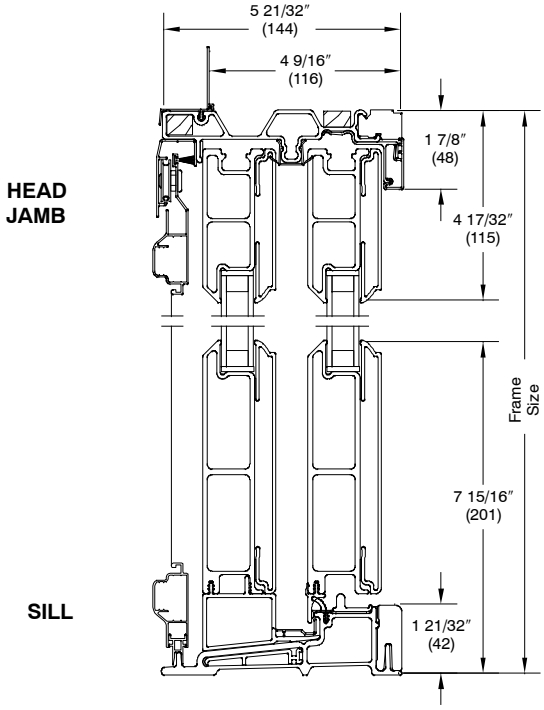

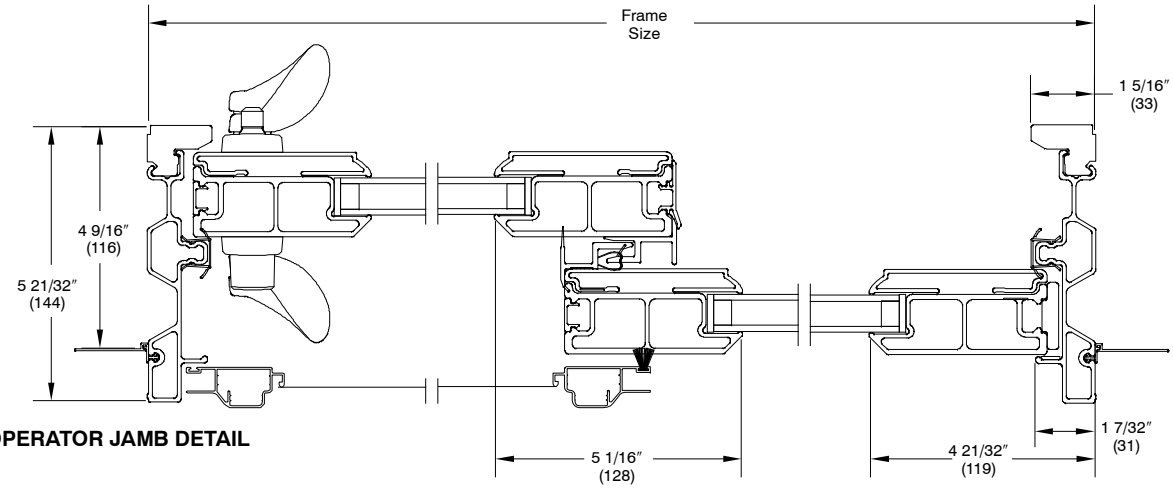

2 PANEL XO OPERATOR JAMB DETAIL

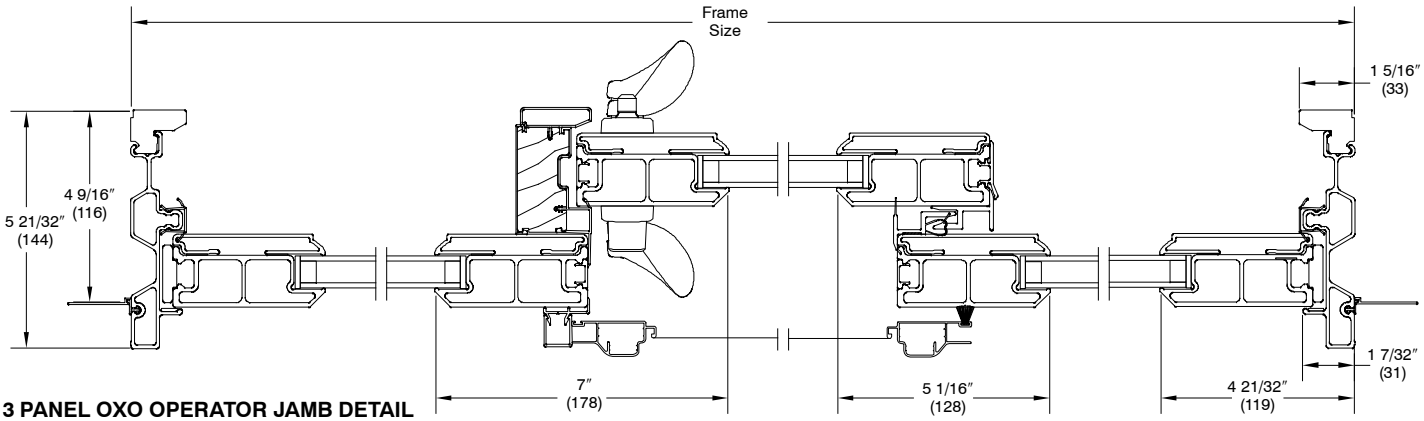

3 PANEL OXO OPERATOR JAMB DETAIL

SECTION DETAILS - DIVIDED LITE OPTIONS

Not to Scale

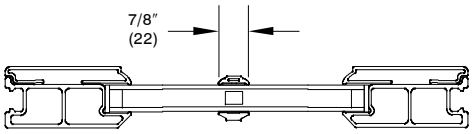

SIMULATED DIVIDED LITE

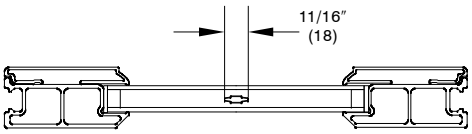

ALUMINUM GRILLE BETWEEN GLASS

DAYLIGHT OPENING CONVERSIONS

RECTANGLE SDL
EXAMPLE SHOWN

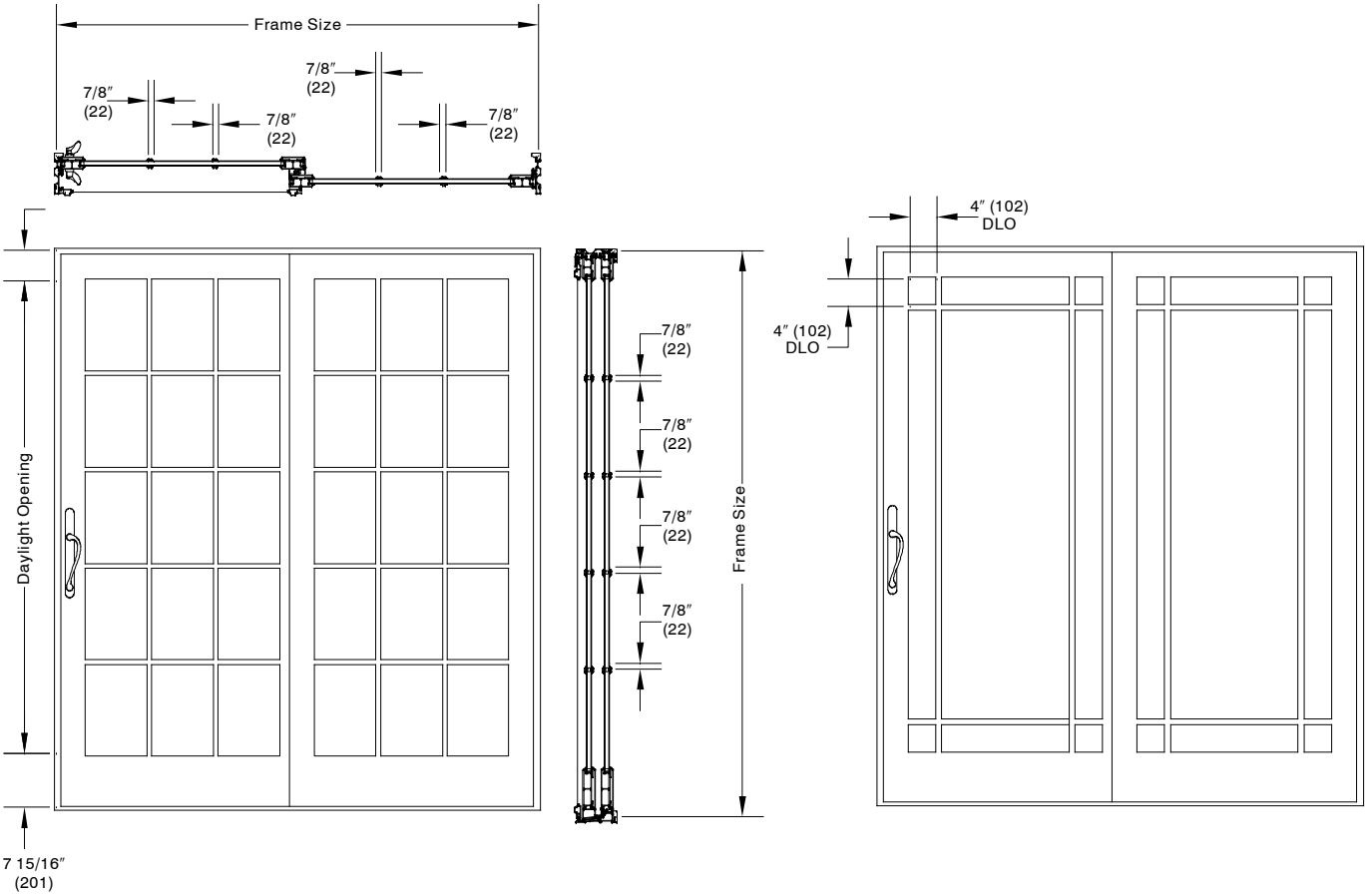

Conversion Formula per panel:

$$\frac{\text{Total DLO - Total bar width}}{\text{Number of lites}} = \text{Individual DLO}$$

INSTALLATION SUGGESTION

INFINITY from MARVIN
REPLACEMENT WINDOWS

Not to Scale

HEAD JAMB

SILL

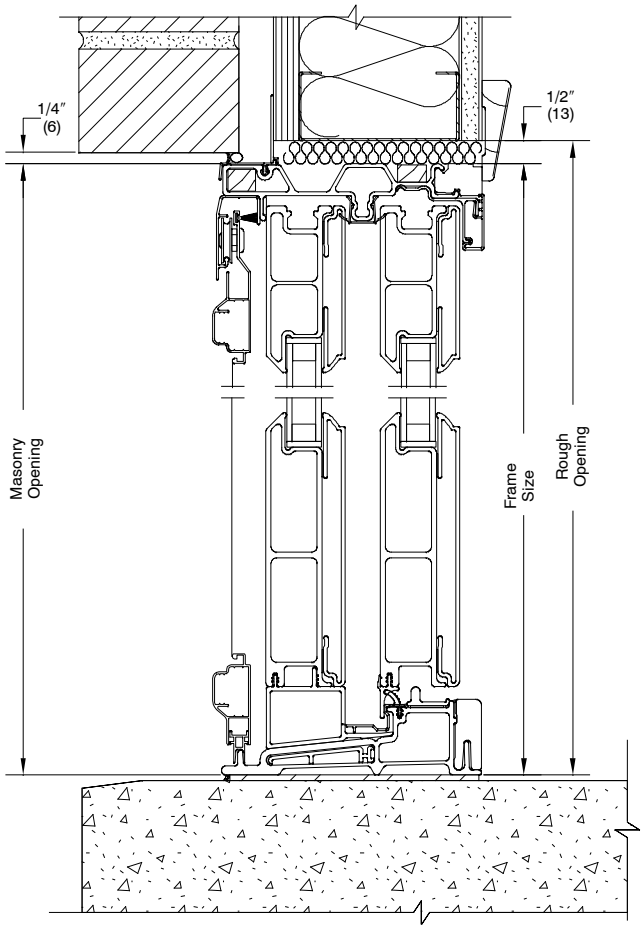

Picture/Transom Head Jamb and Sill

JAMB

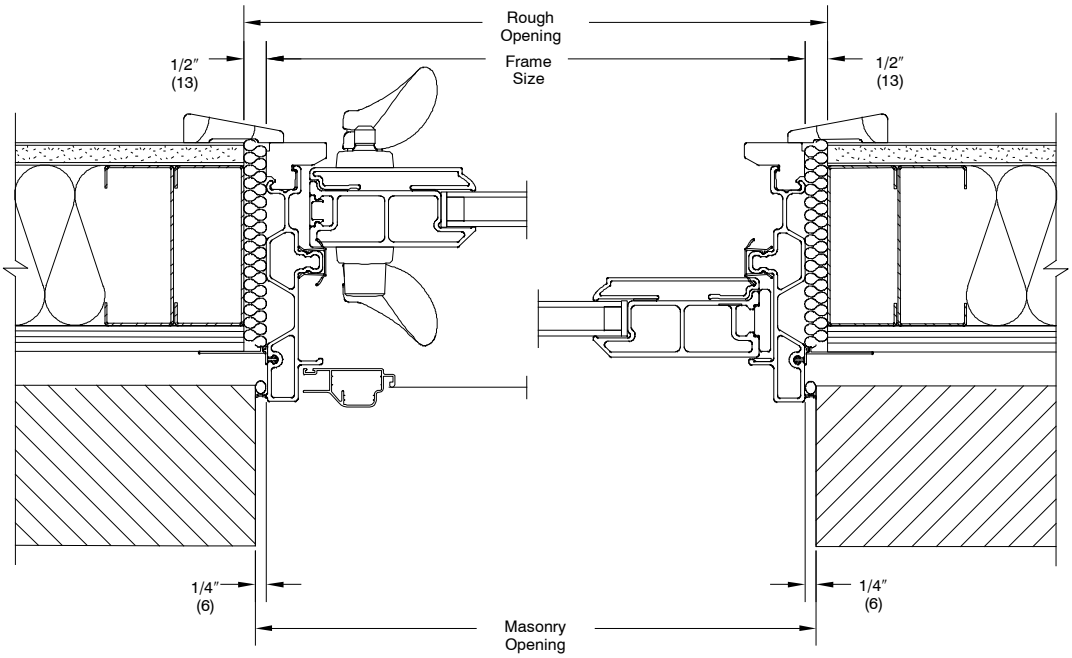

BRICK VENEER WITH STEEL FRAME CONSTRUCTION

NOTE:
The above wall sections represent typical wall conditions, these details are not intended as installation instructions. Please refer to the installation instructions provided with the purchased units.

INSTALLATION SUGGESTION

Not to Scale

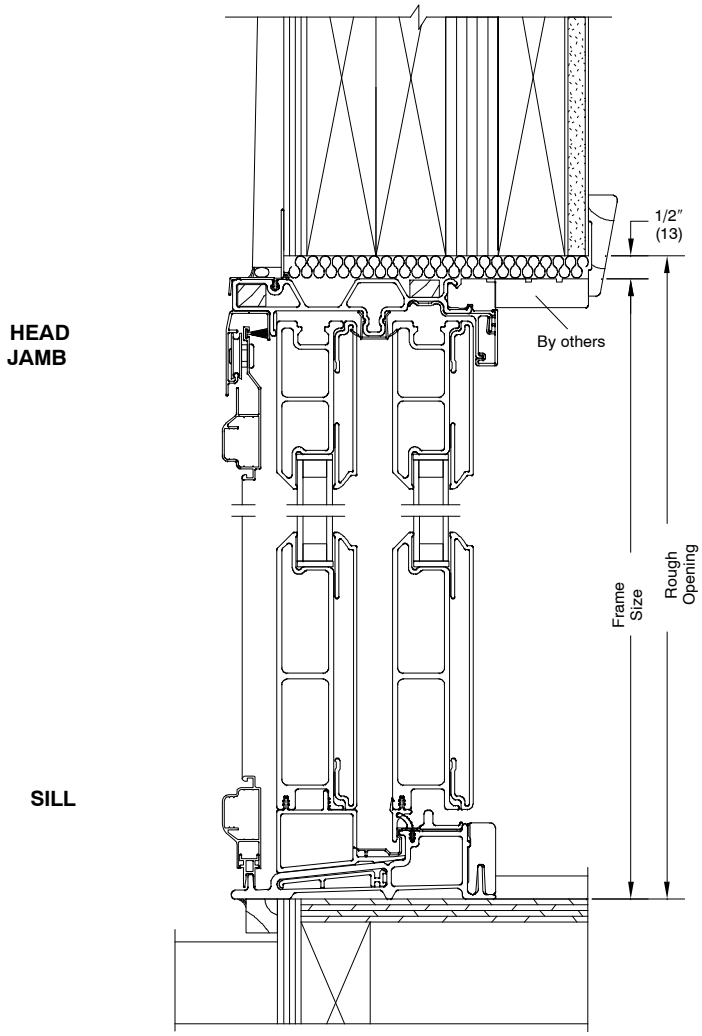

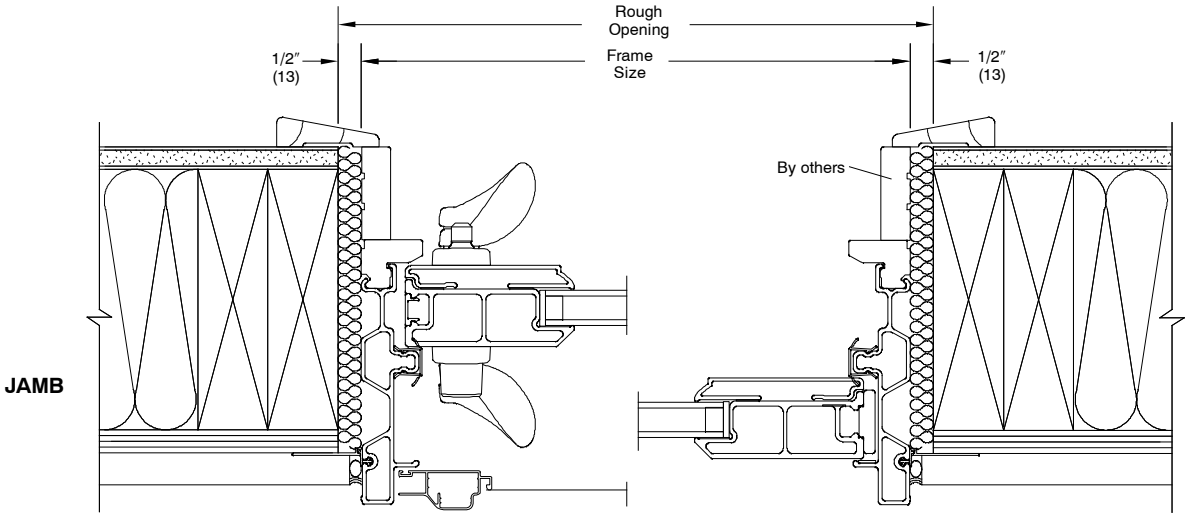

WOOD SIDING WITH 2X6 FRAME CONSTRUCTION

NOTE:
The above wall sections represent typical wall conditions, these details are not intended as installation instructions. Please refer to the installation instructions provided with the purchased units.

SLIDING FRENCH DOOR

INSTALLATION SUGGESTION

Not to Scale

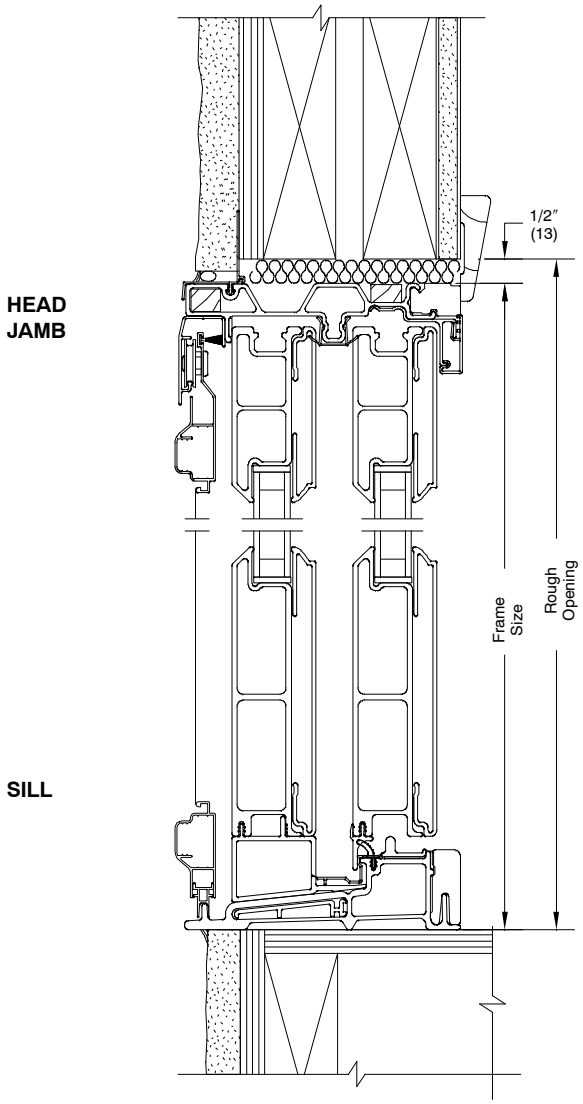

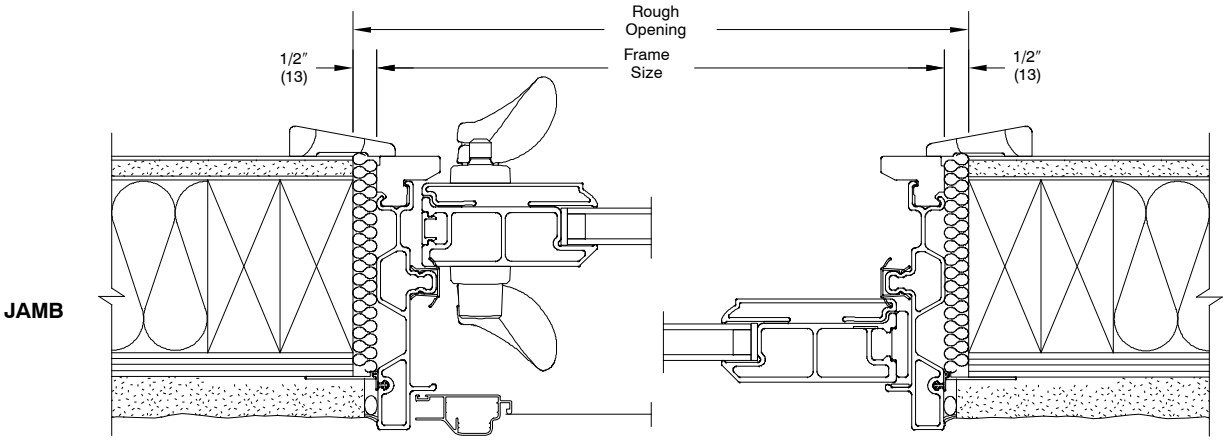

STUCCO WITH 2X4 FRAME CONSTRUCTION

NOTE:
The above wall sections represent typical wall conditions, these details are not intended as installation instructions. Please refer to the installation instructions provided with the purchased units.