TABLE OF CONTENTS

Insert Awning

Product Specifications 7.2
NFRC Values 7.7
Mulling Guidelines 7.9
Sizing/Measurement Conversions Operator 7.10
Sizing/Measurement Conversions Picture 7.11
Section Details – Operator 7.12
Section Details – Picture 7.13
Mullion Details 7.14
Divided Lite Options 7.15
Rectangular Daylight Opening Calculations – Operator 7.16
Rectangular Daylight Opening Calculations – Picture 7.17
Panning Applications 7.18

SECTION 08 54 13
ULTREX® INSERT AWNING WINDOW

PART 1 GENERAL

1.1 SECTION INCLUDES

A. Ultrex® insert [awning] [picture] window complete with hardware, glazing, weatherstrip, insect screen, [grilles–between–the–glass] and standard or specified anchors, trim, and attachments.

1.2 RELATED SECTIONS

A. Section 01 33 23–Submittal Procedures: Shop Drawings, Product Data, and Samples.

B. Section 01 62 00–Product Options.

C. Section 01 65 00–Product Delivery.

D. Section 01 66 00–Product Storage and Handling Requirements.

E. Section 01 71 00–Examination and Preparation.

F. Section 01 73 00–Execution.

G. Section 01 74 00–Cleaning and Waste Management.

H. Section 01 76 00–Protecting Installed Construction.

I. Section 06 22 00–Millwork: Wood trim other than furnished by window manufacture.

J. Section 07 92 00–Joint Sealants: Sill sealant and perimeter caulking.

K. Section 09 90 00–Paints and Coatings: Paint or stain other than factory applied finish.

1.3 REFERENCES

A. American Society for Testing and Materials (ASTM):

1. E 283: Standard Test Method for Rate of Air Leakage through Exterior Windows, Curtain Walls, and Doors.
2. E 330: Standard Test Method for Structural Performance of Exterior Windows, Curtain Walls, and Doors by Uniform Static Air Pressure Difference.
3. E 547: Standard Test Method for Water Penetration of Exterior Windows, Curtain Walls, and Doors by Cyclic Static Air Pressure Differential.
4. E 774: Specification for Sealed Insulated Glass Units
5. C 1036: Standard Specification for Flat Glass.

B. American Architectural Manufacturers Association / Window and Door Manufactures Association (AAMA / WDMA): 101 / I.S.2 / NAFS–02: Voluntary Specifications for Aluminum, Vinyl (PVC) and Wood Windows and Glass Doors.

C. Window and Door Manufacturers Association (WDMA): 101 / I.S.2 / NAFS–02 WDMA Hallmark Certification Program.

D. Sealed Insulating Glass Manufacturers Association Canada/ Insulating Glass Certification Council (IGMAC / IGCC).

E. American Architectural Manufacturers Association (AAMA): AAMA 613–98 Voluntary Performance Requirements and Test Procedures for Organic Coatings on Plastic Profiles.

F. National Fenestration Rating Council (NFRC): 100–97: Procedure for Determining Fenestration Product Thermal Properties

1.4 SYSTEM DESCRIPTION

A. Design and Performance Requirements:

1. Window Units shall be designed to comply with AAMA / WDMA 101 / I.S.2 / NAFS−02.
2. Awning: AP−C40 up to an inside opening of 60.375 inches X 48.250 inches.
3. Picture: F−C40 up to an inside opening of 72.375 inches X 72.250 inches.
4. Air leakage shall not exceed the following when tested at residential performance criteria of 1.57 psf according to ASTM E 283: 0.30 cfm per square foot of frame.
5. No water penetration shall occur when units are tested at the following pressure according to ASTM E 547: R40−6 psf.
6. Window assembly shall withstand the following positive or negative uniform static air pressure difference without damage when tested according to ASTM E 330: R40 − 60 psf.

1.5 SUBMITTALS

A. Shop Drawings: Submit shop drawings under provisions of Section 01 33 23.

B. Product Data: Submit catalog data under provisions of Section 01 33 23.

C. Samples:

1. Submit corner section under provisions of Section 01 33 23.
2. Include glazing system, quality of construction, and specified finish.

D. Quality Control Submittals: Submit manufacture's certifications indicating compliance with specified performance and design requirements under provisions of Section 01 33 23.

1.6 QUALITY ASSURANCE

A. Regulatory Requirements: Emergency Egress or Rescue: Comply with requirements for sleeping units of [IBC Basic Building Code] [_____].

1.7 DELIVERY

A. Comply with provisions of Section 01 65 00.

B. Deliver in original packaging and protect from weather.

1.8 STORAGE AND HANDLING

A. Store window units in an upright position in a clean and dry storage area above ground and protect from weather under provisions of Section 01 66 00.

1.9 WARRANTY

A. Windows shall be warranted to be free from defects in manufacturing, materials, and workmanship for a period of ten (10) years from purchase date.

B. Insulating glass shall be warranted against visible obstruction thru the glass caused by a failure of the insulating glass air seal for a period of twenty (20) years from the date of original purchase.

PART 2 PRODUCTS

2.1 MANUFACTURED UNITS

A. Description: Factory assembled Ultrex® Infinity Insert [awning] [picture] windows as manufactured by Infinity Windows & Doors, West Fargo, North Dakota.

2.2 ULTREX® INSERT AWNING MATERIALS

A. Frame: Ultrex®, a fiberglass reinforced pultrusion. Exterior and Interior 0.075 inch (2 mm) thick. Frame thickness: 1–5/16 inches (33 mm). Frame depth: 3–1/4 inches (83mm)

B. Sash: Ultrex®, a fiberglass reinforced pultrusion. Exterior and Interior 0.075 inch (2 mm) thick. Composite sash thickness: 1–3/8 inches (35 mm) for operating units.

C. Glazing: Select quality complying with ASTM C 1036. Insulating glass IGCC certified to performance level. CBA when tested in accordance with ASTM E 774.

1. Glazing method:
   [Insulating glass] [Altitude adjusted]
2. Glass type:
   [LoĒ-179™ with Argon gas]
   [LoĒ–179 with Argon gas Tempered]
   [LoĒ–179 with Argon gas Obscured]
   [LoĒ–179 with Argon gas Tempered Obscured]
   [LoĒ^2–272® with Argon gas]
   [LoĒ^2–272 with Argon gas Tempered]
   [LoĒ^2–272 with Argon gas Obscured]
   [LoĒ^2–272 with Argon gas Tempered Obscured]
   [LoĒ^3-366® with Argon gas]
   [LoĒ^3-366 with Argon gas Tempered]
   [LoĒ^3-366 with Argon gas Obscured]
   [LoĒ^3-366 with Argon gas Tempered Obscured]
3. Glazing seal: Silicone bedding on interior; silicone bedding on exterior.

D. Simulated Divided Lites (SDL): 7/8 inch (22mm) wide with internal aluminum spacer bars. Exterior bar: Ultrex®finish to match exterior [Stone White] [Sierra] [Pebble Gray] [Bronze] [Cashmere] [Bahama Brown]. Interior bar: ABS (Acrylonitrile Butadiene Styrene) [Stone White] [Sierra] [EverWood™]. Patterns available: Equal Rectangle Lites, Prairie in 4, 6, and 9 lite patterns, Cottage, Oriel, and Checkrail.

E. Grilles Between the Glass: 11/16 by 7/32 inch (17 mm by 6 mm) profiled aluminum spacer between glass panes. Exterior Finish: [Stone White] [Sierra] [Pebble Gray] [Bronze] [Cashmere] [Bahama Brown]. Interior Finish: [Stone White] [Satin Taupe] [Sierra] [Bronze]. Patterns available: Equal Rectangle Lites, Prairie in 4, 6, and 9 lite patterns, Cottage, Oriel, and Checkrail.

F. Finish:

1. Exterior: Ultrex®, a fiberglass reinforced pultrusion with co–extruded Acrylic finish. Color: [Stone White] [Sierra] [Pebble Gray] [Bronze] [Cashmere] [Bahama Brown].
2. Interior: Ultrex®, a fiberglass reinforced pultrusion with co–extruded Acrylic finish. Color: [Stone White] [Sierra] [EverWood™].

G. Hardware:

1. Lock: Cam lock and stainless steel keeper system.
2. Operator: Concealed hinges and steel tracks. Factory installed roto–gear operator.
3. Handle: Die–Cast folding crank handle. Color: [White] [Satin Taupe] [Sierra] [Brass] [Satin Nickel] [Oil Rubbed Bronze]

H. Weatherstrip:

1. Frame: Unit features and extruded foam bulb/leaf weatherstrip that runs continuously around the perimeter of the frame, sealing against the interior face of the sash. Color: [Beige]
2. Sash: The sash weatherstrip is an extruded thermoplastic bulb that is placed against the sides, top and bottom of the sash; sealing against the inner perimeter of the frame. Color: [Beige] [Black for Bahama Brown and Bronze exterior units

I. Insect Screens: Factory installed (removable) full screen. Screen cloth [18 by 16 mesh: Charcoal Fiberglass] [20 x 20 mesh: Charcoal High Transparency Fiberglass]. Frame color: [Stone White] [Satin Taupe] [EverWood] [Sierra].

2.3 ACCESSORIES AND TRIM

A. Installation Accessories:

1. Package of installation hardware consisting of:
    a. Twelve #8 x 3″ Torx® truss head installation screws
    b. Twelve jamb hole plugs
    c. EverWood™ test strip (EverWood™ only)
    d. Paint and Stain Instructions (EverWood™ only)
2. Picture unit package of installation hardware consisting of:
    a. Twelve #8 x 3″ Torx® truss head installation screws
    b. Twelve jamb hole plugs
    c. EverWood™ test strip (EverWood™ only)
    d. Paint and Stain Instructions (EverWood™ only)
3. Sill Installation
    a. Filler108″ length
4. Mulling Accesssories
    a. Exterior mull cover
    b. Mulling bracket
    c. Interior mull cover
    d. #10 x 2″ screw

B. Panning Accessories

1. Fiberglass reinforced ABS:
    a. Profile; [Frame expander] as indicated on drawings.
    b. Color: Stone White, Sierra, Pebble Gray, Bronze, Cashmere or Bahama Brown.
2. Aluminum Extrusions:
    a. Profile: [coil panning] as indicated on drawings. Finish: High solids polyester. Color: Stone White, Sierra, Pebble Gray, Bronze, Cashmere or Bahama Brown.

PART 3 EXECUTION

3.1 EXAMINATION

A. Verification of Conditions: Before installation, verify openings are plumb, square, and of proper dimension as required in Section 01 71 00. Report frame defects or unsuitable conditions to the General Contractor before proceeding.

B. Acceptance of Conditions: Beginning of installation confirms acceptance of existing conditions.

3.2 INSTALLATION

A. Comply with Section 01 73 00.

B. Assemble and install window unit according to manufacturer's instructions and reviewed shop drawings.

C. Install sealant and related backing materials at perimeter of unit or assembly in accordance with Section 07 94 00 Joint Sealants. Do not use expansive foam sealant.

D. Install accessory items as required.

3.3 CLEANING

A. Remove visible labels and adhesive residue from glass according to manufacturer's instructions.

B. Leave windows and glass in a clean condition. Final cleaning as required in Section 01 74 00.

3.4 PROTECTING INSTALLED CONSTRUCTION

A. Comply with Section 01 76 00.

B. Protect windows from damage by chemicals, solvents, paint, or other construction operations that may cause damage.

END OF SECTION

THERMAL PERFORMANCE VALUES Infinity Insert Awning 3.0 mm Size Tested 59 x 24 (1499 x 610)					
ENERGY DATA	**U–Value**	**R–Value**	**SHGC**	**VLT**	**Energy Star**
Insulating Glass LoĒ 179™ - Air	0.34	2.94	0.50	0.56	
Insulating Glass LoĒ 179 – Argon	0.31	3.23	0.50	0.56	N
Insulating Glass LoĒ 179 – Air GBG	0.34	2.94	0.45	0.51	
Insulating Glass LoĒ 179 – Argon GBG	0.31	3.23	0.46	0.51	N
Insulating Glass LoĒ 179 – Air SDL	0.34	2.94	0.45	0.51	
Insulating Glass LoĒ 179 – Argon SDL	0.31	3.23	0.46	0.51	N
Insulating Glass LoĒ 179 - Air Obscure	0.34	2.94	0.50	0.56	
Insulating Glass LoĒ 179 – Argon Obscure	0.31	3.23	0.50	0.56	N
Insulating Glass LoĒ 179 – Air GBG Obscure	0.34	2.94	0.45	0.51	
Insulating Glass LoĒ 179 – Argon GBG Obscure	0.31	3.23	0.46	0.51	N
Insulating Glass LoĒ 179 – Air SDL Obscure	0.34	2.94	0.45	0.51	
Insulating Glass LoĒ 179 – Argon SDL Obscure	0.31	3.23	0.46	0.51	N
Insulating Glass LoĒ^2 272® - Air	0.32	3.13	0.30	0.51	NC, SC
Insulating Glass LoĒ^2 272 – Argon	0.29	3.45	0.30	0.51	N, NC, SC
Insulating Glass LoĒ^2 272 – Air GBG	0.32	3.13	0.28	0.46	NC, SC
Insulating Glass LoĒ^2 272 – Argon GBG	0.29	3.45	0.27	0.46	N, NC, SC, S
Insulating Glass LoĒ^2 272 – Air SDL	0.33	3.03	0.28	0.46	SC
Insulating Glass LoĒ^2 272 – Argon SDL	0.29	3.45	0.27	0.46	N, NC, SC, S
Insulating Glass LoĒ^2 272 – Air Obscure	0.32	3.13	0.30	0.51	NC, SC
Insulating Glass LoĒ^2 272 – Argon Obscure	0.29	3.45	0.30	0.51	N, NC, SC
Insulating Glass LoĒ^2 272 – Air GBG Obscure	0.32	3.13	0.28	0.46	NC, SC
Insulating Glass LoĒ^2 272 – Argon GBG Obscure	0.29	3.45	0.27	0.46	N, NC, SC, S
Insulating Glass LoĒ^2 272 – Air SDL Obscure	0.33	3.03	0.28	0.46	SC
Insulating Glass LoĒ^2 272 – Argon SDL Obscure	0.29	3.45	0.27	0.46	N, NC, SC, S
Insulating Glass LoĒ^3 366® – Air	0.32	3.13	0.20	0.46	NC, SC, S
Insulating Glass LoĒ^3 366 – Argon	0.28	3.57	0.20	0.46	N, NC, SC, S
Insulating Glass LoĒ^3 366 – Air GBG	0.32	3.13	0.19	0.42	NC, SC, S
Insulating Glass LoĒ^3 366 – Argon GBG	0.28	3.57	0.18	0.42	N, NC, SC, S
Insulating Glass LoĒ^3 366 – Air SDL	0.32	3.13	0.19	0.42	NC, SC, S
Insulating Glass LoĒ^3 366 – Argon SDL	0.29	3.45	0.18	0.42	N, NC, SC, S
Insulating Glass LoĒ^3 366 – Air Obscure	0.32	3.13	0.20	0.46	NC, SC, S
Insulating Glass LoĒ^3 366 – Argon Obscure	0.28	3.57	0.20	0.46	N, NC, SC, S
Insulating Glass LoĒ^3 366 – Air GBG Obscure	0.32	3.13	0.19	0.42	NC, SC, S
Insulating Glass LoĒ^3 366 – Argon GBG Obscure	0.28	3.57	0.18	0.42	N, NC, SC, S
Insulating Glass LoĒ^3 366 – Air SDL Obscure	0.32	3.13	0.19	0.42	NC, SC, S
Insulating Glass LoĒ^3 366 – Argon SDL Obscure	0.29	3.45	0.18	0.42	N, NC, SC, S

Product Values are determined using the National Fenestration Rating Council Procedures fro determining fenestration product values.

U–Value: (Btu/hr–sq. ft–*F) Lower the U–value, the greater the resistance to heat flow and better its insulating value.

R–Value: (1/U–Value) Higher the R–Value, the greater the resistance to heat flow and better its insulating value.

VLT: Visible Light Transmittance – Percentage of visible light transmitted through the unit.

SHGC: Solar Heat Gain Coefficient: The lower a window's SHGC , the less solar heat it transmits, and the greater it's shading ability.

NOTE: *Capillary tubes are required for IG units at high elevations. Argon will not be furnished in units with capillary tubes.*

THERMAL PERFORMANCE VALUES Infinity Insert Awning 4.0 mm Size Tested 59 x 24 (1499 x 610)					
ENERGY DATA	**U–Value**	**R–Value**	**SHGC**	**VLT**	**Energy Star**
Insulating Glass LoĒ 179™ - Air	0.35	2.86	0.48	0.56	
Insulating Glass LoĒ 179 – Argon	0.32	3.13	0.49	0.56	N
Insulating Glass LoĒ 179 – Air GBG	0.36	2.78	0.44	0.50	
Insulating Glass LoĒ 179 – Argon GBG	0.32	3.13	0.44	0.50	N
Insulating Glass LoĒ 179 – Air SDL	0.35	2.86	0.44	0.50	
Insulating Glass LoĒ 179 – Argon SDL	0.32	3.13	0.44	0.50	N
Insulating Glass LoĒ 179 - Air Obscure	0.35	2.86	0.48	0.56	
Insulating Glass LoĒ 179 – Argon Obscure	0.32	3.13	0.49	0.56	N
Insulating Glass LoĒ 179 – Air GBG Obscure	0.36	2.78	0.44	0.50	
Insulating Glass LoĒ 179 – Argon GBG Obscure	0.32	3.13	0.44	0.50	N
Insulating Glass LoĒ 179 – Air SDL Obscure	0.35	2.86	0.44	0.50	
Insulating Glass LoĒ 179 – Argon SDL Obscure	0.32	3.13	0.44	0.50	N
Insulating Glass LoĒ^2 272® - Air	0.34	2.94	0.30	0.51	SC
Insulating Glass LoĒ^2 272 – Argon	0.30	3.33	0.30	0.51	N, NC, SC
Insulating Glass LoĒ^2 272 – Air GBG	0.34	2.94	0.27	0.46	SC, S
Insulating Glass LoĒ^2 272 – Argon GBG	0.30	3.33	0.27	0.46	N, NC, SC, S
Insulating Glass LoĒ^2 272 – Air SDL	0.34	2.94	0.27	0.46	SC, S
Insulating Glass LoĒ^2 272 – Argon SDL	0.30	3.33	0.27	0.46	N, NC, SC, S
Insulating Glass LoĒ^2 272 – Air Obscure	0.34	2.94	0.30	0.51	SC
Insulating Glass LoĒ^2 272 – Argon Obscure	0.30	3.33	0.30	0.51	N, NC, SC
Insulating Glass LoĒ^2 272 – Air GBG Obscure	0.34	2.94	0.27	0.46	SC, S
Insulating Glass LoĒ^2 272 – Argon GBG Obscure	0.30	3.33	0.27	0.46	N, NC, SC, S
Insulating Glass LoĒ^2 272 – Air SDL Obscure	0.34	2.94	0.27	0.46	SC, S
Insulating Glass LoĒ^2 272 – Argon SDL Obscure	0.30	3.33	0.27	0.46	N, NC, SC, S
Insulating Glass LoĒ^3 366® – Air	0.33	3.03	0.21	0.46	SC, S
Insulating Glass LoĒ^3 366 – Argon	0.29	3.45	0.20	0.46	N, NC, SC, S
Insulating Glass LoĒ^3 366 – Air GBG	0.34	2.94	0.19	0.41	SC, S
Insulating Glass LoĒ^3 366 – Argon GBG	0.30	3.33	0.19	0.41	N, NC, SC, S
Insulating Glass LoĒ^3 366 – Air SDL	0.34	2.94	0.19	0.41	SC, S
Insulating Glass LoĒ^3 366 – Argon SDL	0.30	3.33	0.19	0.41	N, NC, SC, S
Insulating Glass LoĒ^3 366 – Air Obscure	0.33	3.03	0.21	0.46	SC, S
Insulating Glass LoĒ^3 366 – Argon Obscure	0.29	3.45	0.20	0.46	N, NC, SC, S
Insulating Glass LoĒ^3 366 – Air GBG Obscure	0.34	2.94	0.19	0.41	SC, S
Insulating Glass LoĒ^3 366 – Argon GBG Obscure	0.30	3.33	0.19	0.41	N, NC, SC, S
Insulating Glass LoĒ^3 366 – Air SDL Obscure	0.34	2.94	0.19	0.41	SC, S
Insulating Glass LoĒ^3 366 – Argon SDL Obscure	0.30	3.33	0.19	0.41	N, NC, SC, S

Product Values are determined using the National Fenestration Rating Council Procedures fro determining fenestration product values.

U–Value: (Btu/hr–sq. ft.–*F) Lower the U–value, the greater the resistance to heat flow and better its insulating value.

R–Value: (1/U–Value) Higher the R–Value, the greater the resistance to heat flow and better its insulating value.

VLT: Visible Light Transmittance – Percentage of visible light transmitted through the unit.

SHGC: Solar Heat Gain Coefficient: The lower a window's SHGC , the less solar heat it transmits, and the greater it's shading ability.

NOTE: *Capillary tubes are required for IG units at high elevations. Argon will not be furnished in units with capillary tubes.*

MULLING GUIDELINES FOR INSERT AWNING/CASEMENT ASSEMBLIES*

Multiple assemblies can be factory mulled up to 4 units wide by 1 unit high
MAXIMUM INSIDE OPENING not to exceed 112 3/8″ X 72 1/4″.

up to 1 unit wide by 2 units high
MAXIMUM INSIDE OPENING not to exceed 72 3/8″ X 95 3/4″.

NOTE: FIELD MULLING BEYOND THE ABOVE LIMITATIONS IS NOT RECOMMENDED.

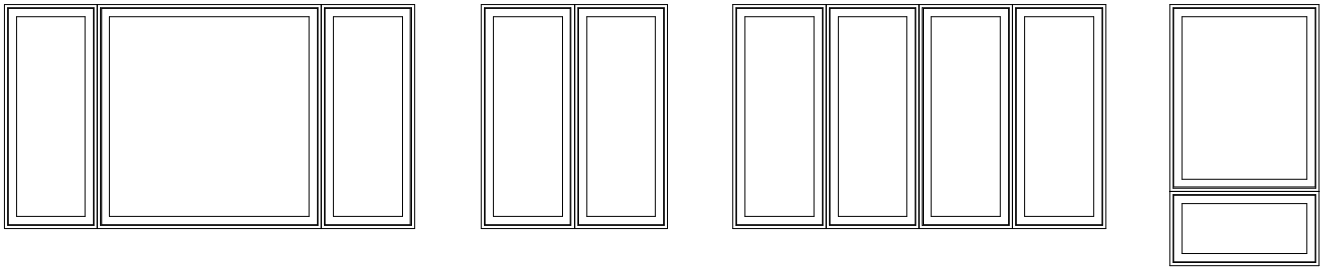

INSIDE OPENING TABLE FOR ASSEMBLIES

WIDTH: Unit Inside Opening width MINUS 3/8″ = Frame width. ADD **all** frame widths PLUS 3/8″ PLUS (1/16″ X number of mulls) = Total Inside Opening Width.

HEIGHT: Single unit Inside Opening height MINUS 1/4″ = Frame Height
Add all frame heights PLUS 1/4″ PLUS (1/16″ x number of mulls) = Total Inside Opening Height.

*NOTE: Please contact Infinity Sales Support at 800–372–1072 for assistance when ordering field mulll products or questions with conversions

SIZING/MEASUREMENT CONVERSIONS – OPERATOR

Glazing Type	Operator Size Guidelines				Glass Size Maximum Square Feet per Sash
	Inside Opening Width		Inside Opening Height		
	Minimum	Maximum	Minimum	Maximum	
Insulating Glass	21 7/8″ (556)	60 3/8″ (1534)	17 5/8″ (448)	48 3/8″ (1229)	16.98 sq. feet

Frame size width = Inside Opening width minus 3/8″ (10)
Frame size height = Inside Opening height minus 1/4″ (6)

Infinity Insert Awning Measurement Conversions		
From Daylight Opening to:	**Width**	**Height**
Sash OM	+3 17/32″ (90)	+3 17/32″ (90)
Glass OM	+1 1/16″ (27)	+1 1/16″ (27)
Non–EverWood Screen OM	+1 11/32″ (43)	+29/32″ (23)
EverWood Screen OM	+1 13/32″ (36)	+29/32″ (23)

Infinity Insert Awning Measurement Conversions		
From Frame OM to:	**Width**	**Height**
Sash OM	–1 11/16″ (43)	–1 11/16″ (43)
Daylight Opening	–5 7/32″ (133)	–5 7/32″ (133)
Glass OM	–4 5/32″ (106)	–4 5/32″ (106)
Non–EverWood Screen OM	–3 7/8″ (98)	–4 5/16″ (110)
EverWood Screen OM	–3 29/32″ (100)	–4 5/16″ (110)

SIZING/MEASUREMENT CONVERSIONS – PICTURE

Glazing Type	Picture Size Guidelines				Glass Size** Maximum sq. ft. per Sash
	Inside Opening Width		Inside Opening Height		
	Minimum	Maximum*	Minimum	Maximum*	
Insulating Glass	14 5/8″ (371)	72 3/8″ (1838)	14 1/2″ (368)	72 1/4″ (1835)	30 sq. feet

* *Glass size width or height must be less than 59″*. (For obscure options)
Tempered glass size width or height must be less that 60″.

** *If glass size exceeds 25 square feet tempered option is required.*

Frame size width = Inside Opening width minus 3/8″ (10)
Frame size height = Inside Opening height minus 1/4″ (6)

Infinity Insert Awning Picture Measurement Conversions		
From Daylight Opening to:	**Width**	**Height**
Sash OM	+3 17/32″ (90)	+3 17/32″ (90)
Glass OM	+1 1/16″ (27)	+1 1/16″ (27)

Infinity Insert Awning Picture Measurement Conversions		
From Frame OM to:	**Width**	**Height**
Sash OM	–1 11/16″ (43)	–1 11/16″ (43)
Daylight Opening	–5 7/32″ (133)	–5 7/32″ (133)
Glass OM	–4 5/32″ (106)	–4 5/32″ (106)

SCALE 3″ = 1′ 0″

OPERATOR

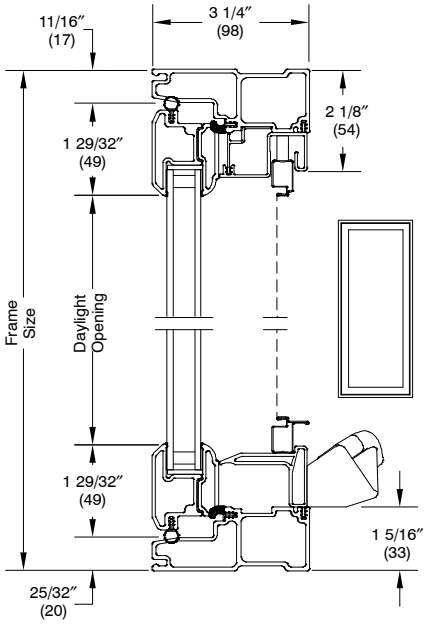

Head Jamb and Sill

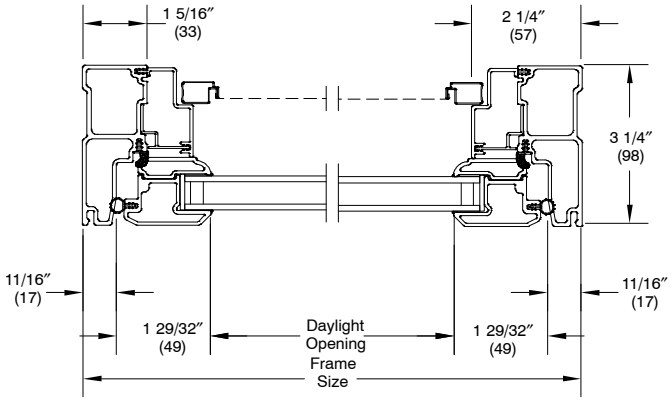

Jambs

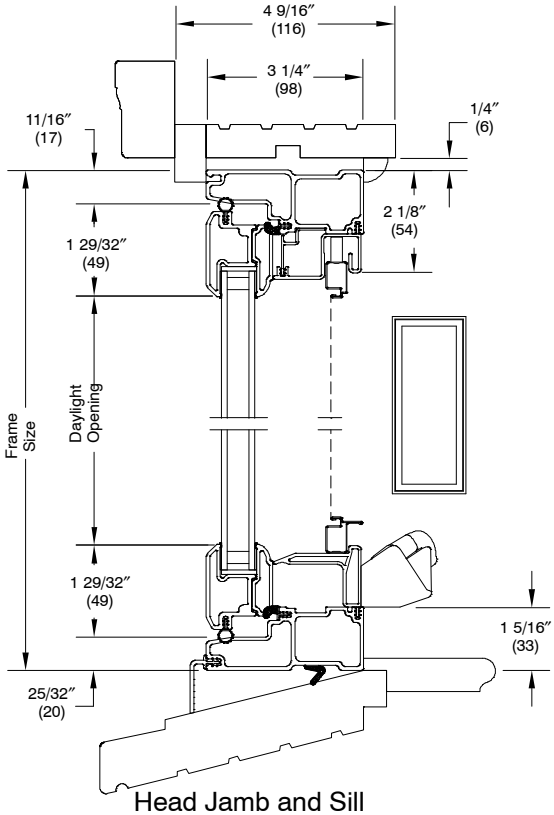

Head Jamb and Sill

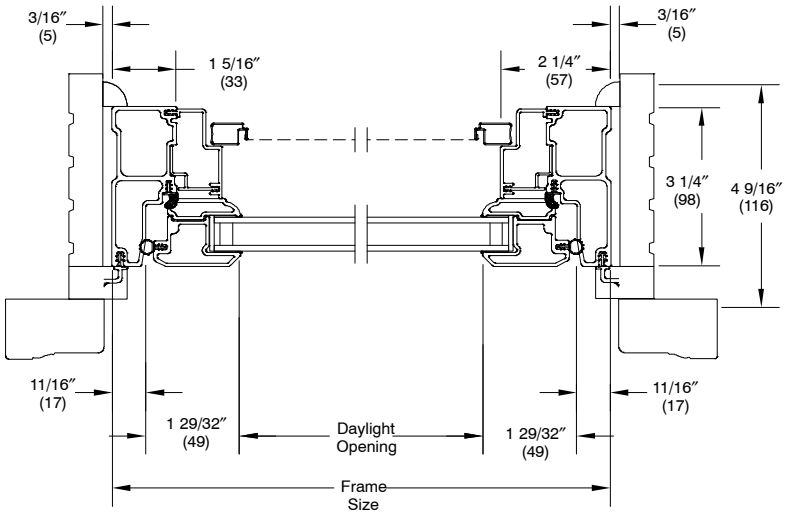

Jambs

SCALE 3″ = 1′ 0″

PICTURE

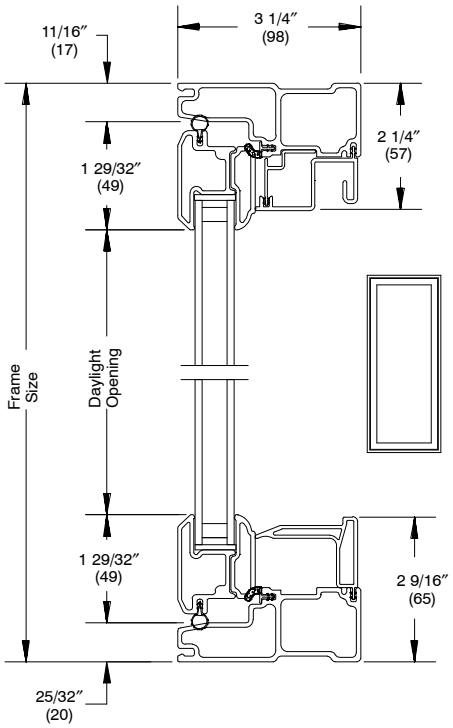

Head Jamb and Sill

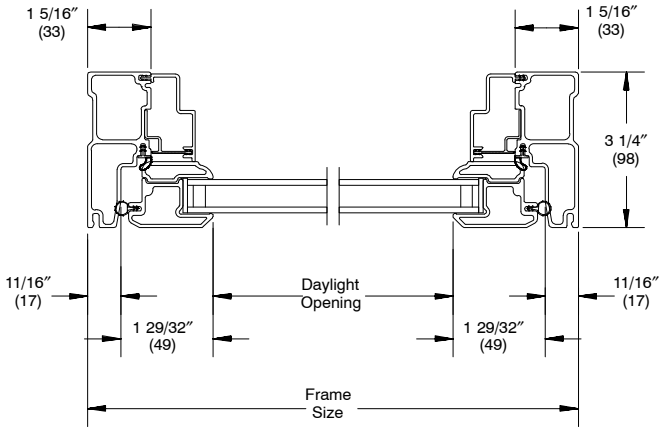

Jambs

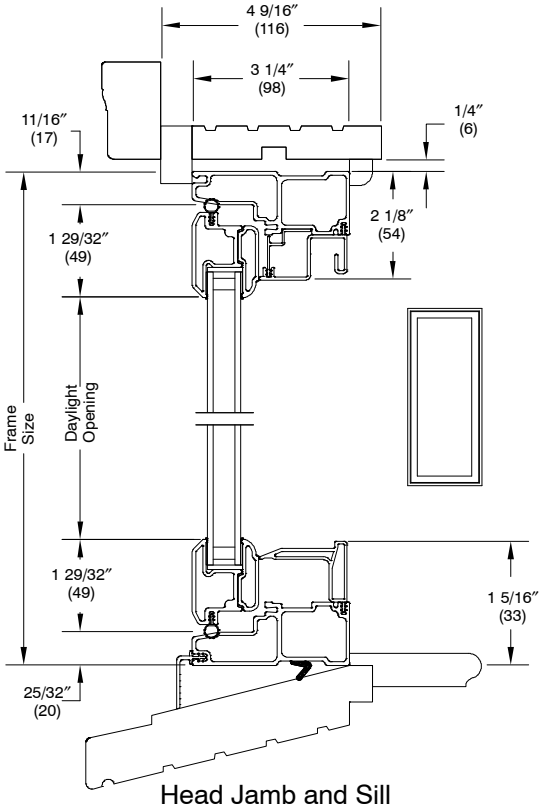

Head Jamb and Sill

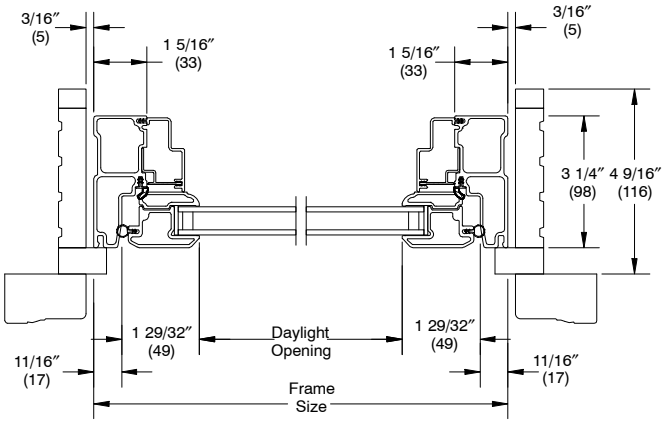

Jambs

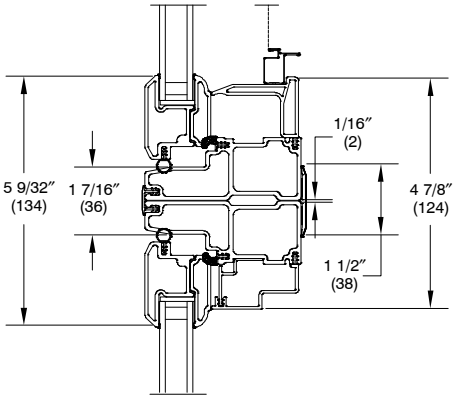

Horizontal Mullion – Operator/Picture

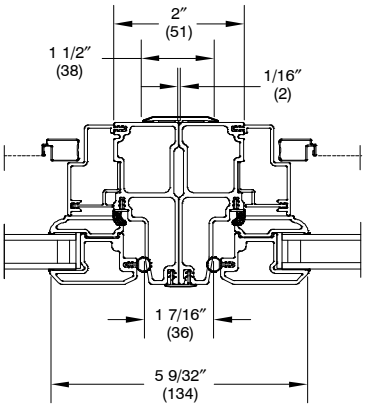

Vertical Mullion – Operator/Operator

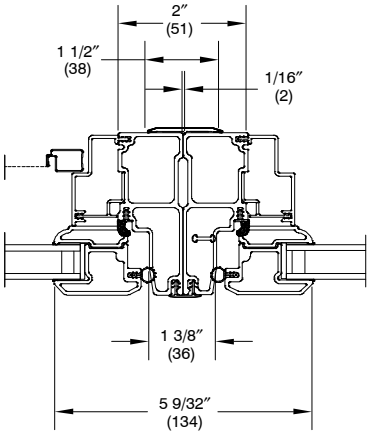

Vertical Mullion – Operator/Picture

DIVIDED LITE OPTIONS

NOT TO SCALE

OPERATOR

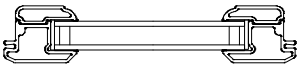

Insulating Glass
Low E II Argon

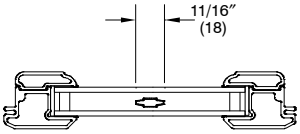

Insulating Glass
Low E II Argon GBG

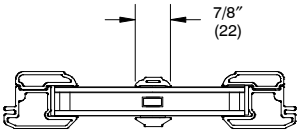

Insulating Glass
Low E II Argon
SDL w/spacer bar

PICTURE

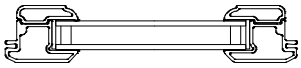

Insulating Glass
Low E II Argon

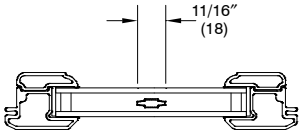

Insulating Glass
Low E II Argon GBG

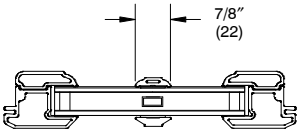

Insulating Glass
Low E II Argon
SDL w/spacer bar

NOTE:
SDL = Simulated Divided Lite
GBG = Grille Between Glass

RECTANGULAR DAYLIGHT OPENING CALCULATIONS – OPERATOR

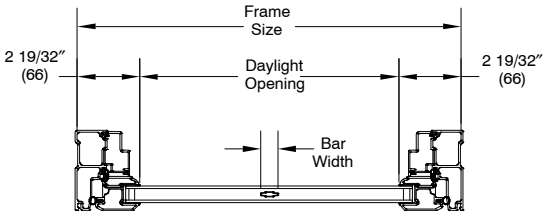

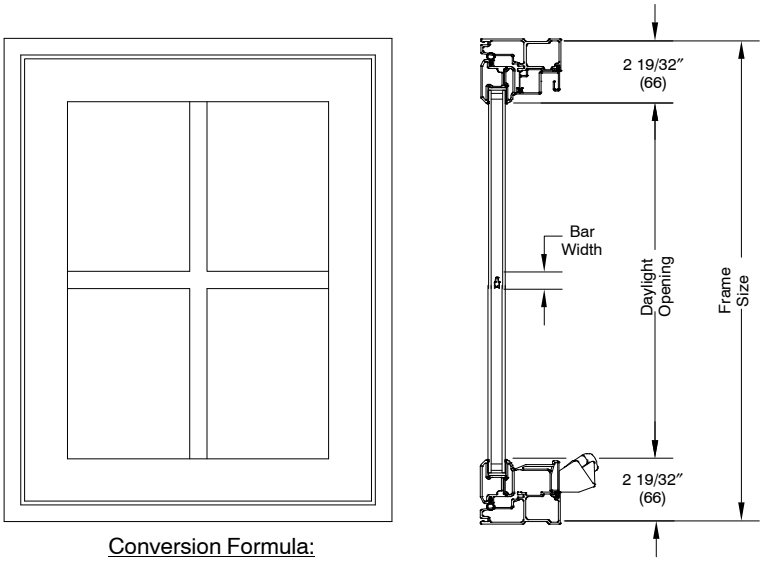

Conversion Formula:

$$\frac{\text{DLO} - \text{Total Bar(s) Width}}{\text{Number of Lites}} = \text{Individual DLO}$$

Bar Widths
SDL Bar Width = 7/8″
GBG Width = 11/16″

NOTE:
For additional information on individual daylight openings please contact your Infinity representative.

RECTANGULAR DAYLIGHT OPENING CALCULATIONS – PICTURE

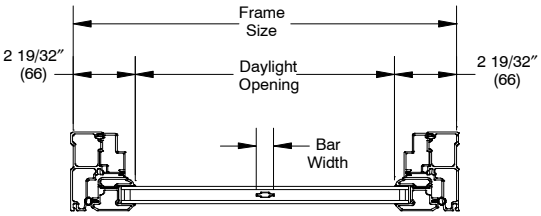

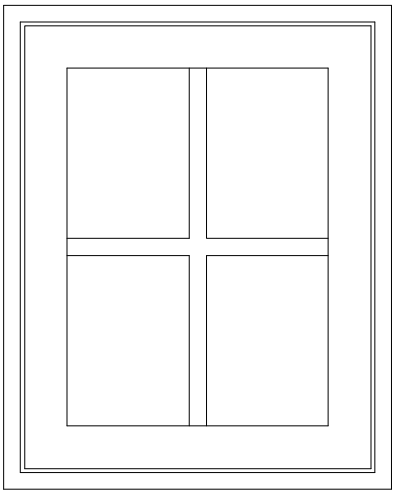

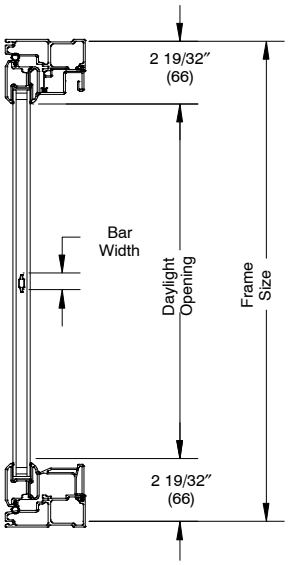

Conversion Formula:

$$\frac{\text{DLO} - \text{Total Bar(s) Width}}{\text{Number of Lites}} = \text{Individual DLO}$$

Bar Widths
SDL Bar Width = 7/8″
GBG Width = 11/16″

NOTE:
For additional information on individual daylight openings please contact your Infinity representative.

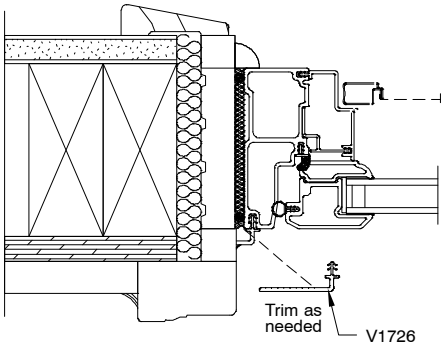

Jamb Frame Expander/V1726

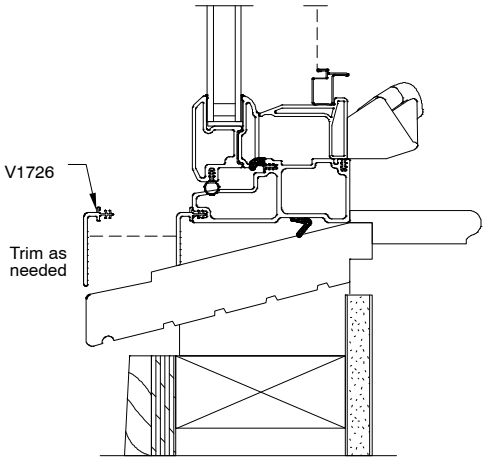

Sill Frame Expander/V1726