TABLE OF CONTENTS

Glider

Product Specifications 4.2
Egress Guidelines 4.7
Egress Measurements 4.8
NFRC 4.9
Sizing/Measurement Conversions − Operator XO, OX 4.10
Sizing/Measurement Conversions − Triple Sash XOX 4.11
Sizing/Measurement Conversions − Picture/Transom 4.12
Section Details − Operator XO, OX 4.13
Section Details − Triple Sash XOX 4.14
Section Details − Picture/Transom 4.15
Casing Details 4.16
Interior Frame Accessories 4.17
Divided Lite Options 4.18
Rectangular Daylight Opening Calculations 4.19

SECTION 08 54 13
ULTREX® GLIDER WINDOW

PART 1 GENERAL

1.1 SECTION INCLUDES

A. Ultrex® [glider] and related [stationary] window complete with hardware, glazing, weather strip, insect screen, [grilles−between−the−glass] and standard or specified anchors, trim, attachments, and accessories.

1.2 RELATED SECTIONS

A. Section 01 33 23−Submittal Procedures: Shop Drawings, Product Data, and Samples.

B. Section 01 62 00−Product Options.

C. Section 01 65 00−Product Delivery.

D. Section 01 66 00−Product Storage and Handling Requirements.

E. Section 01 71 00−Examination and Preparation.

F. Section 01 73 00−Execution.

G. Section 01 74 00−Cleaning and Waste Management.

H. Section 01 76 00−Protecting Installed Construction.

I. Section 06 22 00−Millwork: Wood trim other than furnished by window manufacture.

J. Section 07 92 00−Joint Sealants: Sill sealant and perimeter caulking.

K. Section 09 90 00−Paints and Coatings: Paint or stain other than factory applied finish.

1.3 REFERENCES

A. American Society for Testing and Materials (ASTM):

1. E 283: Standard Test Method for Rate of Air Leakage through Exterior Windows, Curtain Walls, and Doors.
2. E 330: Standard Test Method for Structural Performance of Exterior Windows, Curtains Walls, and Doors by Uniform Static Air Pressure Difference.
3. E 547: Standard Test Method for Water Penetration of Exterior Windows, Curtain Walls, and Doors by Cyclic Static Air Pressure Differential.
4. E 774: Specification for Sealed Insulated Glass Units.
5. C 1036: Standard Specification for Flat Glass.

B. American Architectural Manufacturers Association / Window and Door Manufacturers Association (AAMA / WDMA): 101 / I.S.2−97: Voluntary Specifications for Aluminum, Vinyl (PVC) and Wood Windows and Glass Doors.

C. Window and Door Manufacturers Association (WDMA): 101 / I.S.2−97 WDMA Hallmark Certification Program.

D. Sealed Insulating Glass Manufacturers Association Canada/ Insulating Glass Certification Council (IGMAC / IGCC).

E. American Architectural Manufacturers Association (AAMA): AAMA 613−98 Voluntary Performance Requirements and Test Procedures for Organic Coatings on Plastic Profiles.

F. National Fenestration Rating Council (NFRC): 100−97: Procedure for Determining Fenestration Product Thermal Properties.

1.4 SYSTEM DESCRIPTION

A. Design and Performance Requirements:

1. Window Units shall be designed to comply with AAMA / WDMA 101 I.S.2−97
   a. Glider: HS−LC30 up to 72 X 60 Frame size.
   b. Triple Sash Unit: HS−LC30 up to 104 X 60 Frame Size
   c. Picture/Transom: F−LC30 up to 72 X 60 Frame size
2. Air leakage shall not exceed the following when tested at HS−R30 − 1.57psf according to ASTM E 283: HS−R30 − 0.30 cfm per square foot of frame.
3. No water penetration shall occur when units are tested at the following pressure according to ASTM E 547: HS−R30 − 4.5 psf.
4. Window assembly shall withstand the following positive or negative uniform static air pressure difference without damage when tested according to ASTM E 330: HS−R30 − 45 psf.

1.5 SUBMITTALS

A. Shop Drawings: Submit shop drawings under provisions of Section 01 33 23.

B. Product Data: Submit catalog data under provisions of Section 01 33 23.

C. Samples:

1. Submit corner section under provisions of Section 01 33 23.
2. Include glazing system, quality of construction, and specified finish.

D. Quality Control Submittals: Submit manufacture's certifications indicating compliance with specified performance and design requirements under provisions of Section 01 33 23.

1.6 QUALITY ASSURANCE

A. Regulatory Requirements: Emergency Egress or Rescue: Comply with requirements for sleeping units of [IBC Basic Building Code] [_____].

1.7 DELIVERY

A. Comply with provisions of Section 01 65 00.

B. Deliver in original packaging and protect from weather.

1.8 STORAGE AND HANDLING

A. Store window units in an upright position in a clean and dry storage area above ground and protect from weather under provisions of Section 01 66 00.

1.9 WARRANTY

A. Windows shall be warranted to be free from defects in manufacturing, materials, and workmanship for a period of ten 10) years from purchase date.

B. Insulating glass shall be warranted against visible obstruction thru the glass caused by a failure of the insulating glass air seal for a period of twenty (20) years from the date of original purchase.

PART 2 PRODUCTS

2.1 MANUFACTURED UNITS

A. Description: Factory assembled Ultrex® Infinity Insert Glider windows [and related stationary units] as manufactured by Infinity Windows & Doors, West Fargo, North Dakota.

2.2 ULTREX® INSERT GLIDER MATERIALS

A. Frame: Ultrex®, a fiberglass reinforced pultrusion. Interior 0.075 inch (2 mm) thick. Frame thickness: 31/32 inch (25 mm) head jamb, 31/32 inch (25 mm) composite side jamb, 25/32 inches (20 mm) sill, Flat bottom sill with 8 degree bevel. Frame width: 2 7/8 inches (73mm).

B. Sash: Ultrex®, a fiberglass reinforced pultrusion. Interior 0.075 inch (2mm) thick. Composite sash thickness: 1−3/8 inches (35 mm) overall. Sash exterior Ultrex®, a fiberglass reinforced pultrusion, 0.075 inch (2 mm) thick. Operable sash tilt to interior for cleaning or removal.

C. Glazing: Select quality complying with ASTM C 1036. Insulating glass IGCC certified to performance level CBA when tested in accordance with ASTM E 774.

1. Glazing method:
   [Insulating glass] [Altitude adjusted]
2. Glass type:
   [LoĒ-179™ with Argon gas]
   [LoĒ−179 with Argon gas Tempered]
   [LoĒ−179 with Argon gas Obscured]
   [LoĒ−179 with Argon gas Tempered Obscured]
   [LoĒ^{2}−272® with Argon gas]
   [LoĒ^{2}−272 with Argon gas Tempered]
   [LoĒ^{2}−272 with Argon gas Obscured]
   [LoĒ^{2}−272 with Argon gas Tempered Obscured]
   [LoĒ^{3}-366® with Argon gas]
   [LoĒ^{3}-366 with Argon gas Obscured]
   [LoĒ^{3}-366 with Argon gas Tempered Obscured]
3. Glazing seal: Silicone bedding on interior; silicone bedding on exterior.

D. Simulated Divided Lites (SDL): 7/8 inch (22mm) wide with internal aluminum spacer bars. Exterior bar: Ultrex®, finish to match exterior [Stone White] [Sierra] [Pebble Gray] [Bronze] [Cashmere] [Bahama Brown].

E. Interior bar: ABS (Acrylonitrile Butadiene Styrene) [Stone White] [Sierra] [EverWood™]. Patterns available: Equal Rectangle Lites, Prairie in 4, 6, and 9 lite patterns, Cottage, Oriel, and Checkrail.

F. Grilles Between the Glass: 11/16 by 7/32 inch (17 mm by 6 mm) profiled aluminum spacer between glass panes. Exterior Finish: [Stone White] [Sierra] [Pebble Gray] [Bronze] [Cashmere] [Bahama Brown]. Interior Finish: [Stone White] [Satin Taupe] [Sierra] [Bronze]. Patterns available: Equal Rectangle Lites, Prairie in 4, 6, and 9 lite patterns, Cottage, Oriel, and Checkrail.

G. Finish:

1. Exterior: Ultrex®, a fiberglass reinforced pultrusion with co−extruded Acrylic finish. Color: [Stone White] [Sierra] [Pebble Gray] [Bronze] [Cashmere] [Bahama Brown].
2. Interior: Ultrex®, a fiberglass reinforced pultrusion with co−extruded Acrylic finish. Color: [Stone White] [Sierra] [EverWood™].

H. Hardware:

1. Lock: zinc die−cast lock and keeper: Color: [White] [Satin Taupe] [Sierra] [Brass] [Satin Nickel] [Oil Rubbed Bronze]. One sash lock on units up to 48 inches (1219mm) in height, two locks on units greater than 48 inches.
2. Pull: Color: [White] [Satin Taupe] [Sierra] [Brass] [Satin Nickel] [Oil Rubbed Bronze]

I. Weather Strip: Foam filled weather strip is used for added long term performance to seal against both the operating and stationary sash top rails and the operating sash bottom rail. The stationary meeting stile has a weather strip interlock to seal against the operating meeting stile. The operating and stationary stiles seal against a weather strip on the jamb parting stop. Stationary units: Continuous, foam weather strip at perimeter of sash.

J. Insect Screens: Factory installed (removable) [full screen]. Screen cloth [18 by 16 mesh: Charcoal Fiberglass] [20 x 20 mesh: Charcoal High Transparency Fiberglass]. Frame color: [Stone White] [Sierra] [Pebble Gray] [Bronze] [Cashmere] [Bahama Brown].

2.3 ACCESSORIES AND TRIM

A. Installation Accessories:

1. Operator package of installation hardware consisting of:
   a. Nine #8 x 2″ Torx® truss head installation screws − Stone White
   b. One sash pull
   c. Two sash pull hole plugs
   d. Two #7 x 3/4″ Phillips flat head screws (for sash pull) − White
   e. Keeper pile weather strip (EverWood™ only)
   f. EverWood™ test strip (EverWood™ only)
   g. Paint and Stain Instructions (EverWood™ only)
2. Triple Sash package of installation hardware consisting of:
   a. Eleven #8 x 2″ Torx® truss head installation screws − Stone White
   b. Two sash pulls
   c. Four sash pull hole plugs
   d. Four #7 x 3/4″ Phillips flat head screws (for sash pull) − White
   e. Keeper pile weather strip (EverWood™ only)
   f. EverWood™ test strip (EverWood™ only)
   g. Paint and Stain Instructions (EverWood™ only)
3. Picture/Transom package of installation hardware consisting of:
   a. Twelve #8 x 2″ Torx® truss head installation screws
   b. EverWood™ test strip (EverWood™ only)
   c. Paint and Stain Instructions (EverWood™ only)
4. Sill Installation filler:
   a. 108″ length
5. Interior Frame, Installation and Mulling Accessories:
   a. Interior frame cover
   b. 5/8″ Sheetrock receiver
   c. Jamb extension material
   d. Nailing fin
   e. Nailing fin drip cap
   f. Nailing fin corner gaskets
   g. Exterior mull cover
   h. Mulling pin
   i. Interior mull clip
   j. Interior mull clip cover
   k. Head jamb mull bracket
   l. Mull tape − 1−sided
6. Exterior Casing:
   a. Optional factory or field applied, fiberglass reinforced ABS, (BMC) Brick Mould Casing.

B. Panning Accessories

1. Fiberglass reinforced ABS:
   a. Profile; [Frame expander] as indicated on drawings.
   b. Color: Stone White, Sierra, Pebble Gray, Bronze, Cashmere or Bahama Brown.
2. Aluminum Extrusions:
   a. Profile: [coil panning] as indicated on drawings. Finish: High solids polyester. Color: Stone White, Sierra, Pebble Gray, Bronze, Cashmere or Bahama Brown.

PART 3 EXECUTION

3.1 EXAMINATION

A. Verification of Conditions: Before installation, verify openings are plumb, square, and of proper dimension as required in Section 01 71 00. Report frame defects or unsuitable conditions to the General Contractor before proceeding.

B. Acceptance of Conditions: Beginning of installation confirms acceptance of existing conditions.

3.2 INSTALLATION

A. Comply with Section 01 73 00.

B. Assemble and install window unit according to manufacturer's instructions and reviewed shop drawings.

C. Install sealant and related backing materials at perimeter of unit or assembly in accordance with Section 07 92 00 Joint Sealants.

D. Install accessory items as required.

3.3 CLEANING

A. Remove visible labels and adhesive residue from glass according to manufacturer's instructions.

B. Leave windows and glass in a clean condition. Final cleaning as required in Section 01 74 00.

3.4 PROTECTING INSTALLED CONSTRUCTION

A. Comply with Section 01 76 00.

B. Protect windows from damage by chemicals, solvents, paint, or other construction operations that may cause damage.

END OF SECTION

XO, OX EGRESS

MINIMUM EGRESS REQUIREMENTS	
Rough Opening Width	**Rough Opening Height**
46 7/16	60
46 7/16	58
46 7/16	56
46 7/16	54
46 7/16	52
46 7/16	50
46 7/16	48
46 7/16	46
46 3/4	44
48 7/8	42
51 1/4	40
53 3/4	38
56 5/8	36
59 7/8	34
63 5/8	32
67 7/8	30

NGL EGRESS GUIDELINES

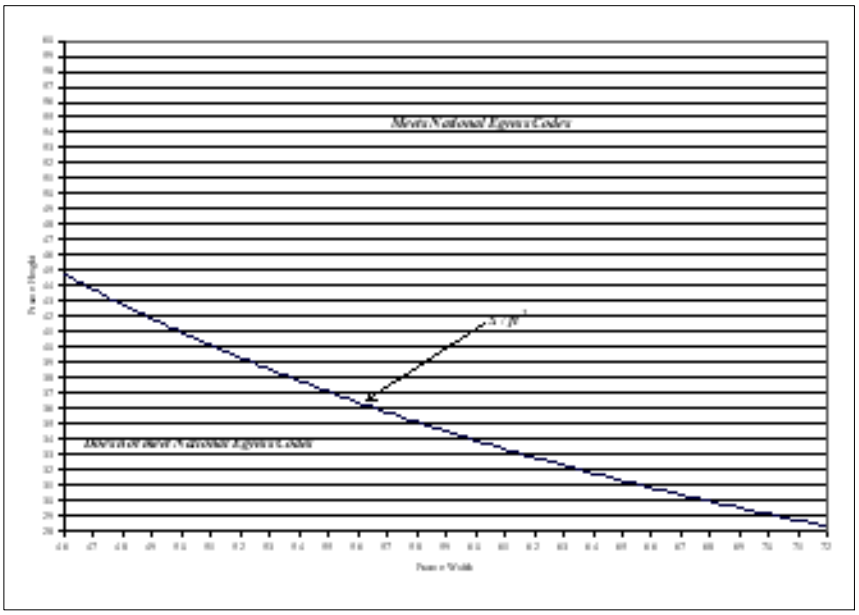

* When installed in accordance to recommended measuring and installation guidelines, these sizes meet national egress codes for fire evacuation. Local codes may differ.

TRIPLE SASH XOX EGRESS

MINIMUM EGRESS REQUIREMENTS	
Rough Opening Width	**Rough Opening Height**
90 13/16	60
90 13/16	58
90 13/16	56
90 13/16	54
90 13/16	52
90 13/16	50
90 13/16	48
90 13/16	46
91 1/2	44
95 5/8	42
100 1/4	40

NGL EGRESS GUIDELINES

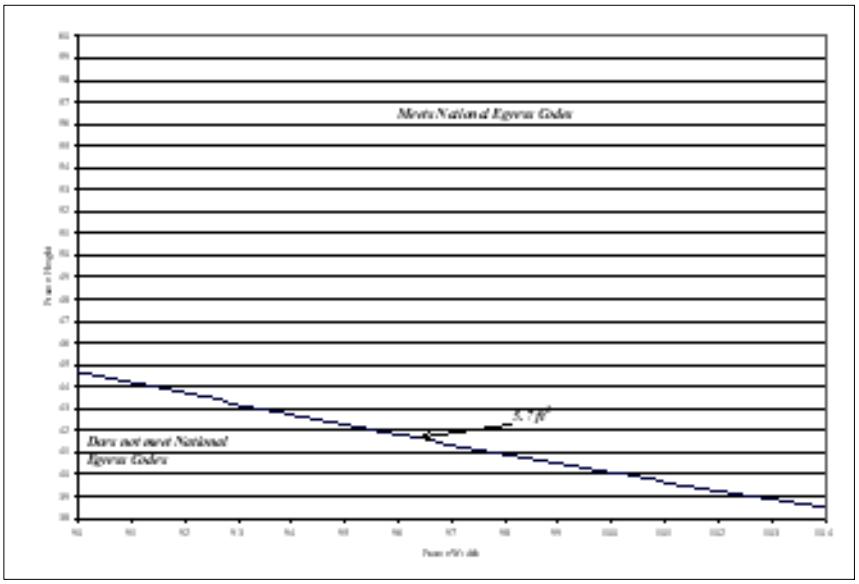

* When installed in accordance to recommended measuring and installation guidelines, these sizes meet national egress codes for fire evacuation. Local codes may differ.

EGRESS MEASUREMENTS

International Building Code − 2000
Section 1009 Emergency Escape and Rescue

1009.2 Minimum size: Emergency escape and rescue openings shall have a minimum net clear opening of 5.7 square feet (0.53m^2). Exception: The minimum net clear opening for emergency escape and rescue openings on the ground level at grade is 5.0 square feet (0.46m^2).

1009.2.1 Minimum dimensions: The minimum net clear opening height dimension shall be 24 inches (610 mm). The net clear opening width dimension shall be 20 inches (508 mm). The net clear opening dimensions shall be the result of normal operation of the opening.

1009.3 Maximum height from the floor: Emergency escape and rescue opening shall have the bottom of the clear opening not greater than 44 inches (1118 mm) measured from the floor.

1009.4 Operational constraints: Emergency escape and rescue openings shall be operational from the inside of the room without the use of keys or tools. Bars, grilles, grates, or similar devices are permitted to be placed over emergency escape and rescue openings provided the minimum net clear opening size complies with Section 1009.2 and such devices shall be releasable or removable from the inside without the use of a key, tool, or force greater than that which is required for normal operation of the escape and rescue opening.

Code restrictions may vary depending on your local building codes.

Note: Refer to Measurement instructions.

NGL EGRESS MEASUREMENTS

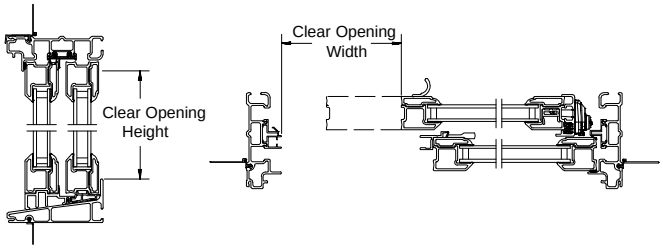

* When installed in accordance to recommended measuring and installation guidelines, these sizes meet national egress codes for fire evacuation. Local codes may differ.

THERMAL PERFORMANCE VALUES Infinity Glider 3.0 mm Size Tested 59 x 47 (1500 x 1200)					
ENERGY DATA	**U−Value**	**R−Value**	**SHGC**	**VLT**	**Energy Star**
Insulating Glass LoĒ 179™ - Air	0.35	2.86	0.53	0.60	
Insulating Glass LoĒ 179 − Argon	0.32	3.13	0.54	0.60	N
Insulating Glass LoĒ 179 − Air GBG	0.35	2.86	0.48	0.54	
Insulating Glass LoĒ 179 − Argon GBG	0.32	3.13	0.48	0.54	N
Insulating Glass LoĒ 179 − Air SDL	0.35	2.86	0.48	0.54	
Insulating Glass LoĒ 179 − Argon SDL	0.32	3.13	0.48	0.54	N
Insulating Glass LoĒ 179 - Air Obscure	0.35	2.86	0.53	0.60	
Insulating Glass LoĒ 179 − Argon Obscure	0.32	3.13	0.54	0.60	N
Insulating Glass LoĒ 179 − Air GBG Obscure	0.35	2.86	0.48	0.54	
Insulating Glass LoĒ 179 − Argon GBG Obscure	0.32	3.13	0.48	0.54	N
Insulating Glass LoĒ 179 − Air SDL Obscure	0.35	2.86	0.48	0.54	
Insulating Glass LoĒ 179 − Argon SDL Obscure	0.32	3.13	0.48	0.54	N
Insulating Glass LoĒ2 272® - Air	0.34	2.94	0.32	0.55	
Insulating Glass LoĒ2 272 − Argon	0.30	3.33	0.32	0.55	N, NC
Insulating Glass LoĒ2 272 − Air GBG	0.35	2.86	0.29	0.49	SC
Insulating Glass LoĒ2 272 − Argon GBG	0.31	3.23	0.29	0.49	NC, SC
Insulating Glass LoĒ2 272 − Air SDL	0.35	2.86	0.29	0.49	SC
Insulating Glass LoĒ2 272 − Argon SDL	0.31	3.23	0.29	0.49	NC, SC
Insulating Glass LoĒ2 272 − Air Obscure	0.34	2.94	0.32	0.55	
Insulating Glass LoĒ2 272 − Argon Obscure	0.30	3.33	0.32	0.55	N, NC
Insulating Glass LoĒ2 272 − Air GBG Obscure	0.35	2.86	0.29	0.49	SC
Insulating Glass LoĒ2 272 − Argon GBG Obscure	0.31	3.23	0.29	0.49	NC, SC
Insulating Glass LoĒ2 272 − Air SDL Obscure	0.35	2.86	0.29	0.49	SC
Insulating Glass LoĒ2 272 − Argon SDL Obscure	0.31	3.23	0.29	0.49	NC, SC
Insulating Glass LoĒ3 366® − Air	0.33	3.03	0.22	0.50	SC, S
Insulating Glass LoĒ3 366 − Argon	0.30	3.33	0.21	0.50	N, NC, SC, S
Insulating Glass LoĒ3 366 − Air GBG	0.34	2.94	0.20	0.44	SC, S
Insulating Glass LoĒ3 366 − Argon GBG	0.30	3.33	0.19	0.44	N, NC, SC, S
Insulating Glass LoĒ3 366 − Air SDL	0.34	2.94	0.20	0.44	SC, S
Insulating Glass LoĒ3 366 − Argon SDL	0.30	3.33	0.19	0.44	N, NC, SC, S
Insulating Glass LoĒ3 366 − Air Obscure	0.33	3.03	0.22	0.50	SC, S
Insulating Glass LoĒ3 366 − Argon Obscure	0.30	3.33	0.21	0.50	N, NC, SC, S
Insulating Glass LoĒ3 366 − Air GBG Obscure	0.34	2.94	0.20	0.44	SC, S
Insulating Glass LoĒ3 366 − Argon GBG Obscure	0.30	3.33	0.19	0.44	N, NC, SC, S
Insulating Glass LoĒ3 366 − Air SDL Obscure	0.34	2.94	0.20	0.44	SC, S
Insulating Glass LoĒ3 366 − Argon SDL Obscure	0.30	3.33	0.19	0.44	N, NC, SC, S

Product Values are determined using the National Fenestration Rating Council Procedures fro determining fenestration product values.

U−Value: (Btu/hr−sq. ft−*F) Lower the U−value, the greater the resistance to heat flow and better its insulating value.

R−Value: (1/U−Value) Higher the R−Value, the greater the resistance to heat flow and better its insulating value.

VLT: Visible Light Transmittance − Percentage of visible light transmitted through the unit.

SHGC: Solar Heat Gain Coefficient: The lower a window's SHGC , the less solar heat it transmits, and the greater its shading ability.

NOTE: *Capillary tubes are required for IG units at high elevations. Argon will not be furnished in units with capillary tubes.*

SIZING/MEASUREMENT CONVERSIONS − OPERATOR XO, OX

Glazing Type	Operator Size Guidelines				Glass Size Maximum Square Feet per Sash
	Rough Opening Width		Rough Opening Height		
	Minimum	Maximum	Minimum	Maximum	
Insulating Glass	26 5/8″ (676)	73″ (1854)	15″ (381)	60 1/2″ (1537)	12.79 sq. feet (1.19) sq. meters

Frame size height = Rough Opening height minus 1/2″ (13)
Frame size width = Rough Opening width minus 1″ (25)

Infinity Glider Measurement Conversions		
From Daylight Opening to:	**Width**	**Height**
Operator Sash OM	+3 11/16″ (94)	+3 1/4″ (83)
Stationary Sash OM	+3 1/4″ (83)	+3 1/4″ (83)
Glass OM	+1 1/16″ (27)	+1 1/16″ (27)
Screen OM	+1 3/4″ (44)	+3 11/32″ (85)

Infinity Glider Measurement Conversions		
From Frame OM to:	**Width**	**Height**
BMC OM	+2 3/4″ (70)	+1 15/16″ (49)
Operator Sash OM	−1 1/4″ (32) ÷ 2 + 13/32″ (10)	−2 7/32″ (56)
Stationary Sash OM	−1 1/4″ (32) ÷ 2	−2 7/32″ (56)
Daylight Opening	−1 1/4″ (32) ÷ 2 − 3 1/4″ (83)	−5 17/32″ (140)
Glass OM	−1 1/4″ (32) ÷ 2 −2 3/16″ (56)	−4 15/32″ (114)
Screen OM	−1 1/4″ (32) ÷ 2 −1 15/32″ (37)	−2 3/16″ (56)

SIZING/MEASUREMENT CONVERSIONS − TRIPLE SASH − XOX

Glazing Type	Triple Sash Size Guidelines				Glass Size Maximum Square Feet
	Rough Opening Width		Rough Opening Height		
	Minimum	Maximum	Minimum	Maximum	
Insulating Glass	50 3/16″ (1275)	105″ (2667)	15″ (381)	60 1/2″ (1537)	19.12 sq. feet Stationary (1.78) sq. meters 9.14 sq. feet Operator (0.85) sq. meters

Frame size height = Rough Opening height minus 1/2″ (13)
Frame size width = Rough Opening width minus 1″ (25)

Infinity Glider Measurement Conversions		
From Daylight Opening to:	**Width**	**Height**
Operator Sash OM	+3 11/16″ (94)	+3 1/4″ (83)
Stationary Sash OM	+3 1/4″ (83)	+3 1/4″ (83)
Glass OM	+1 1/16″ (27)	+1 1/16″ (27)
Screen OM	+1 3/4″ (44)	+3 11/32″ (85)

Infinity Glider Measurement Conversions			
From Frame OM to:	**Width**		**Height**
	Stationary	**Operating**	
BMC OM	+2 3/4″ (70)	+2 3/4″ (70)	+1 15/16″ (49)
Sash OM	−13/32″ (10) ÷ 2	+ 1 1/4″ (32) ÷ 4	−2 7/32″ (56)
Daylight Opening	−13/32″ (10) ÷ 2 −3 1/4″ (83)	+ 1 1/4″ (32) ÷ 4 −3 21/32″ (93)	−5 17/32″ (140)
Glass OM	−13/32″ (10) ÷ 2 −2 3/16″ (56)	+ 1 1/4″ (32) ÷ 4 −2 19/32″ (66)	−4 15/32″ (114)
Screen OM	N/A	+1 1/4″ (32) ÷ 4 −1 7/8″ (48)	−2 3/16″ (56)

SIZING/MEASUREMENT CONVERSIONS − PICTURE/TRANSOM

Glazing Type	Picture/Transom Size Guidelines				Glass Size Maximum Square Feet
	Rough Opening Width		Rough Opening Height		
	Minimum	Maximum	Minimum	Maximum	
Insulating Glass	15 3/8″ (391)	73″ (1854)	14 13/16″ (376)	60 1/2″ (1537)	26.18 sq. feet (2.43) sq. meters

Frame size height = Rough Opening height minus 1/2″(13)
Frame size width = Rough Opening width minus 1″(25)

Infinity Glider Picture/Transom Measurement Conversions		
From Daylight Opening to:	**Width**	**Height**
Sash OM	+3 1/4″ (83)	+3 1/4″ (83)
Glass OM	+1 1/16″ (27)	+1 1/16″ (27)

Infinity Glider Picture/Transom Measurement Conversions		
From Frame OM to:	**Width**	**Height**
BMC OM	+2 3/4″ (70)	+1 15/16″ (49)
Sash OM	−2 5/32″ (55)	−2 3/32″ (53)
Daylight Opening	−5 13/32″ (137)	−5 11/32″ (136)
Glass OM	−4 11/32″ (110)	−4 9/32″ (109)

SECTION DETAILS−OPERATOR − XO, OX

SCALE 3″ = 1′ 0″

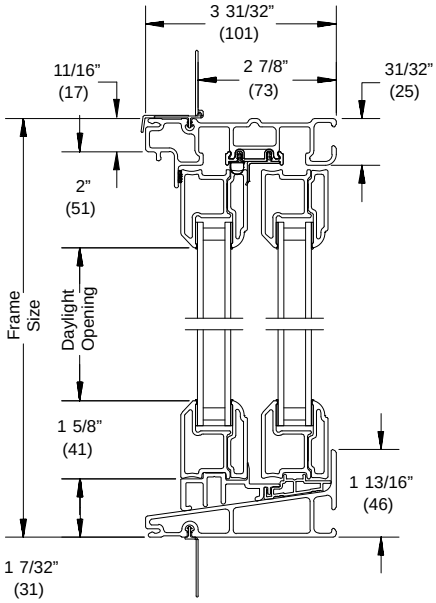

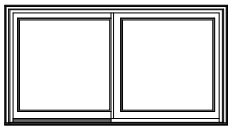

Head Jamb and Sill

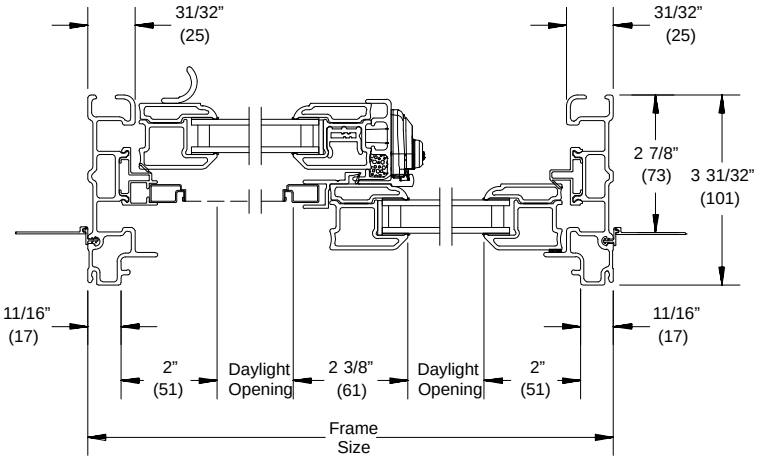

Jambs and Meeting Stile

SECTION DETAILS − TRIPLE SASH XOX

SCALE 3″ = 1′ 0″

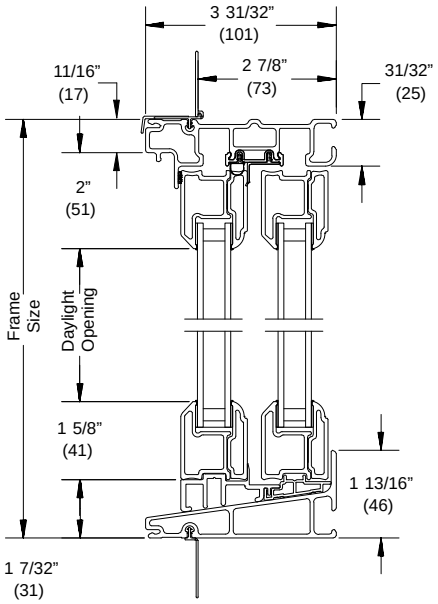

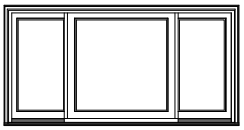

Head Jamb and Sill

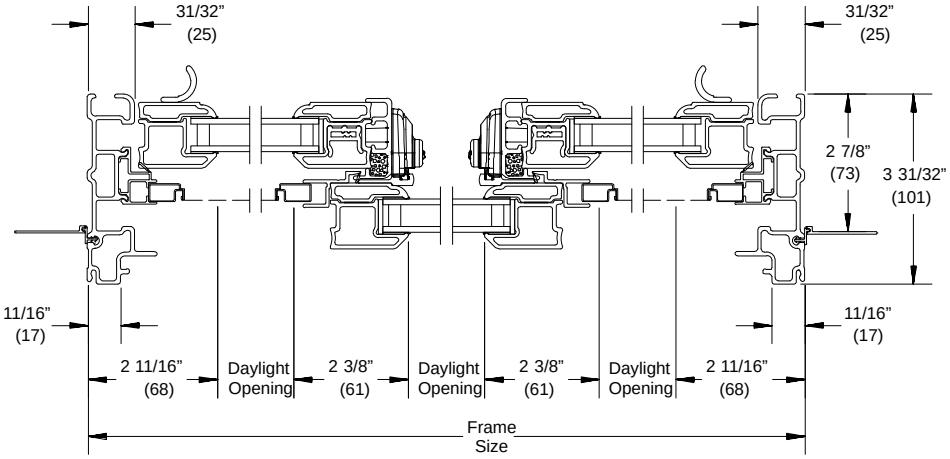

Jambs and Meeting Stile

SECTION DETAILS − PICTURE/TRANSOM

SCALE 3″ = 1′ 0″

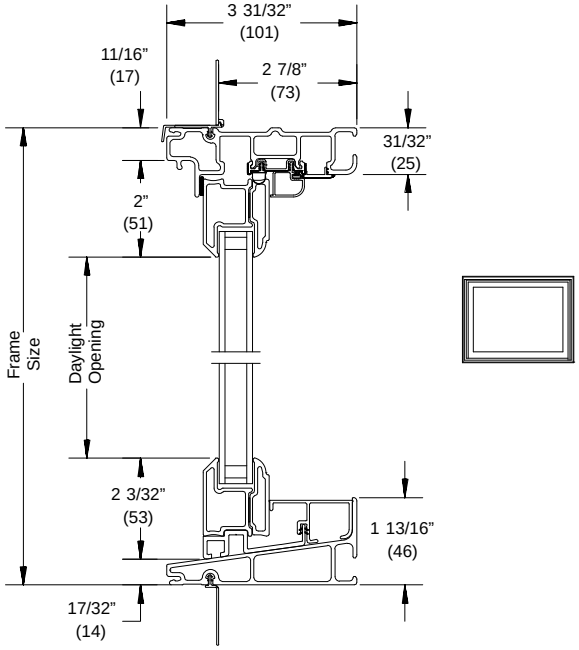

Picture/Transom Head Jamb and Sill

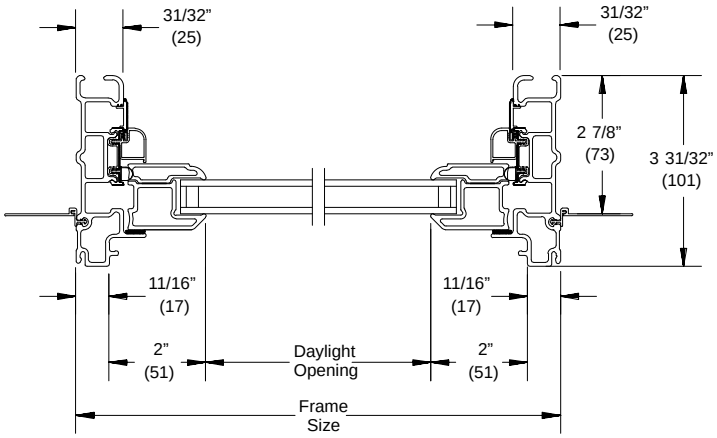

Jamb

CASING DETAILS

SCALE 3″ = 1′ 0″

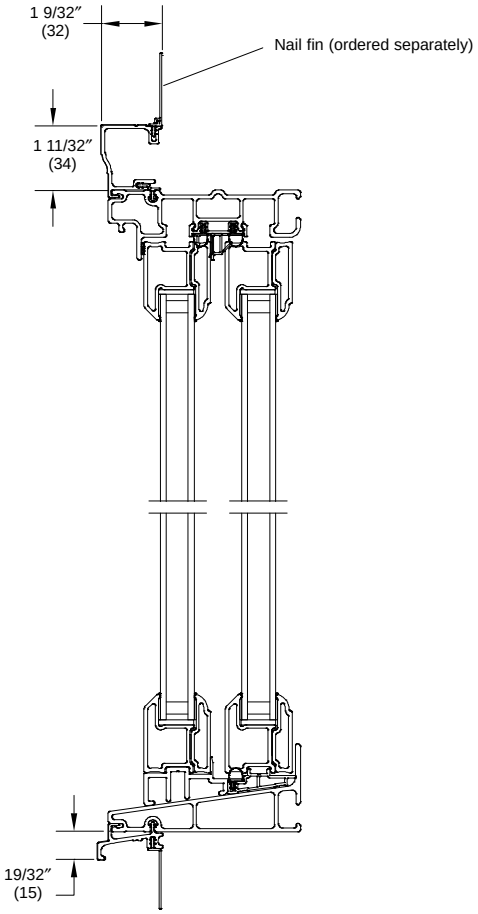

Head Jamb and Sill
with Brick Mould Casing

INTERIOR FRAME ACCESSORIES

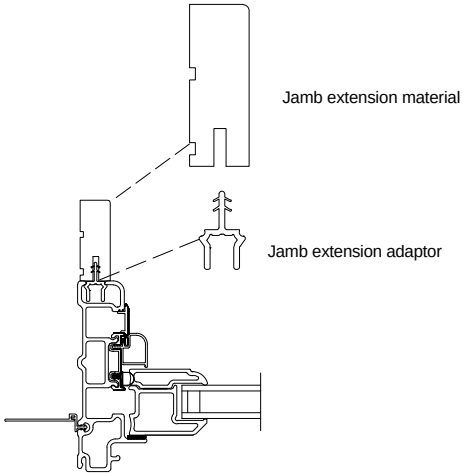

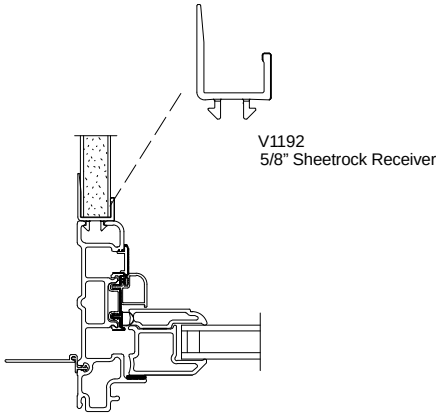

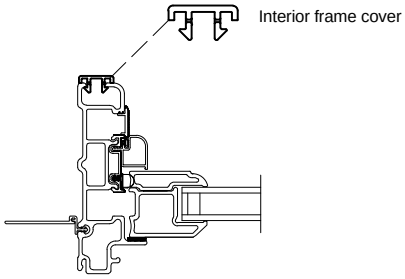

DIVIDED LITE OPTIONS

NOT TO SCALE

Operator

Insulating Glass
Low E II Argon

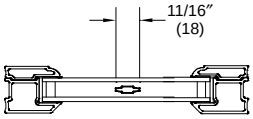

Insulating Glass
Low E II Argon GBG

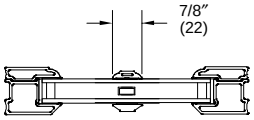

Insulating Glass
Low E II Argon
SDL w/spacer bar

Triple Sash − XOX

Insulating Glass
Low E II Argon

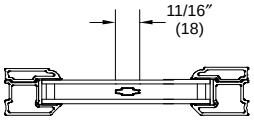

Insulating Glass
Low E II Argon GBG

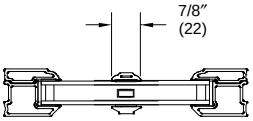

Insulating Glass
Low E II Argon
SDL w/spacer bar

Picture/Transom

Insulating Glass
Low E II Argon

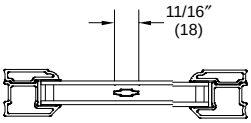

Insulating Glass
Low E II Argon GBG

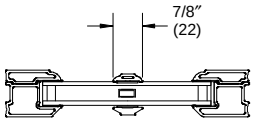

Insulating Glass
Low E II Argon
SDL w/spacer bar

NOTE:
SDL = Simulated Divided Lite
GBG = Grille Between Glass

RECTANGULAR DAYLIGHT OPENING CALCULATIONS

Operating − XO, OX

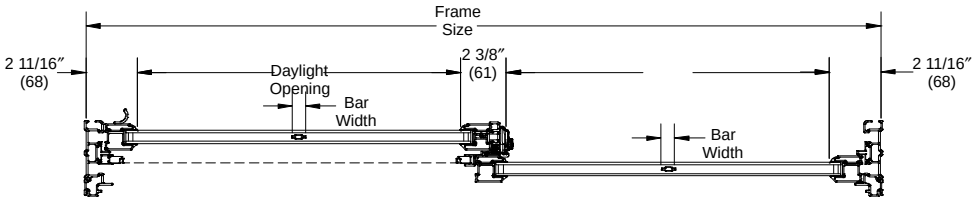

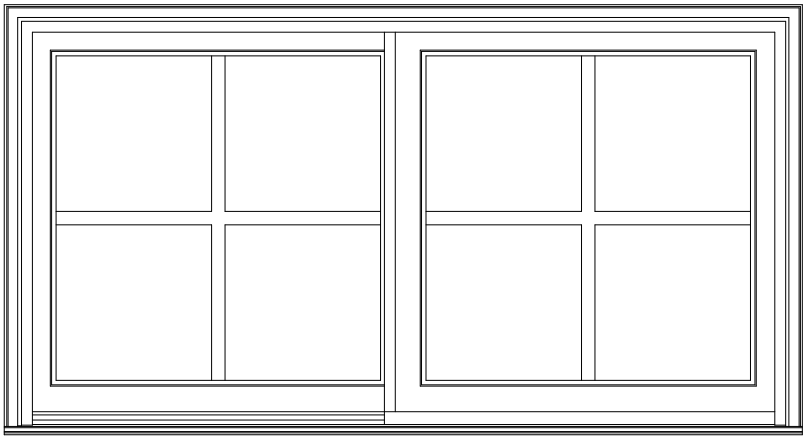

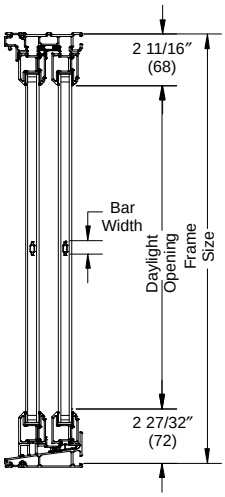

Triple Sash − XOX

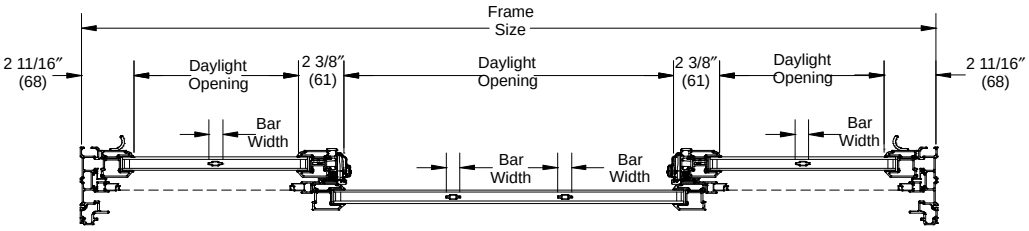

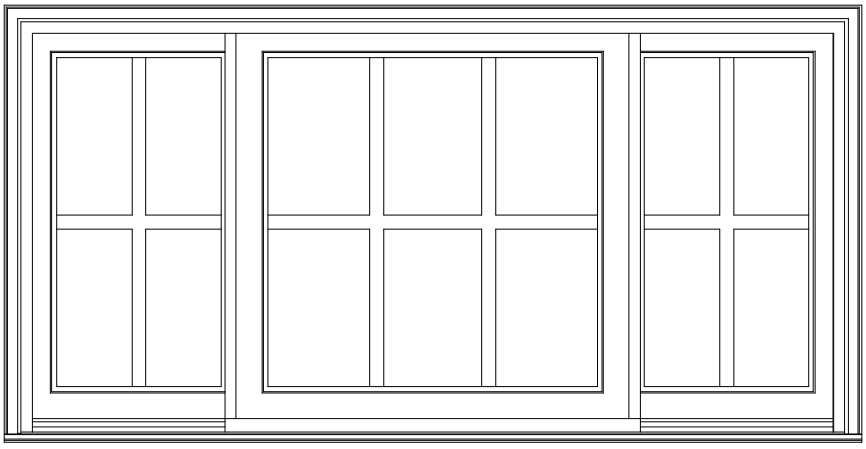

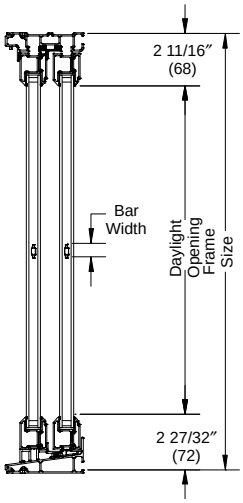

Conversion Formula:

$$\frac{\text{DLO} - \text{Total Bar(s) Width}}{\text{Number of Lites}} = \text{Individual DLO}$$

Bar Widths
SDL Bar Width = 7/8″
GBG Width = 11/16″

NOTE:
For additional information on individual daylight openings please contact your Infinity representative.

Picture/Transom

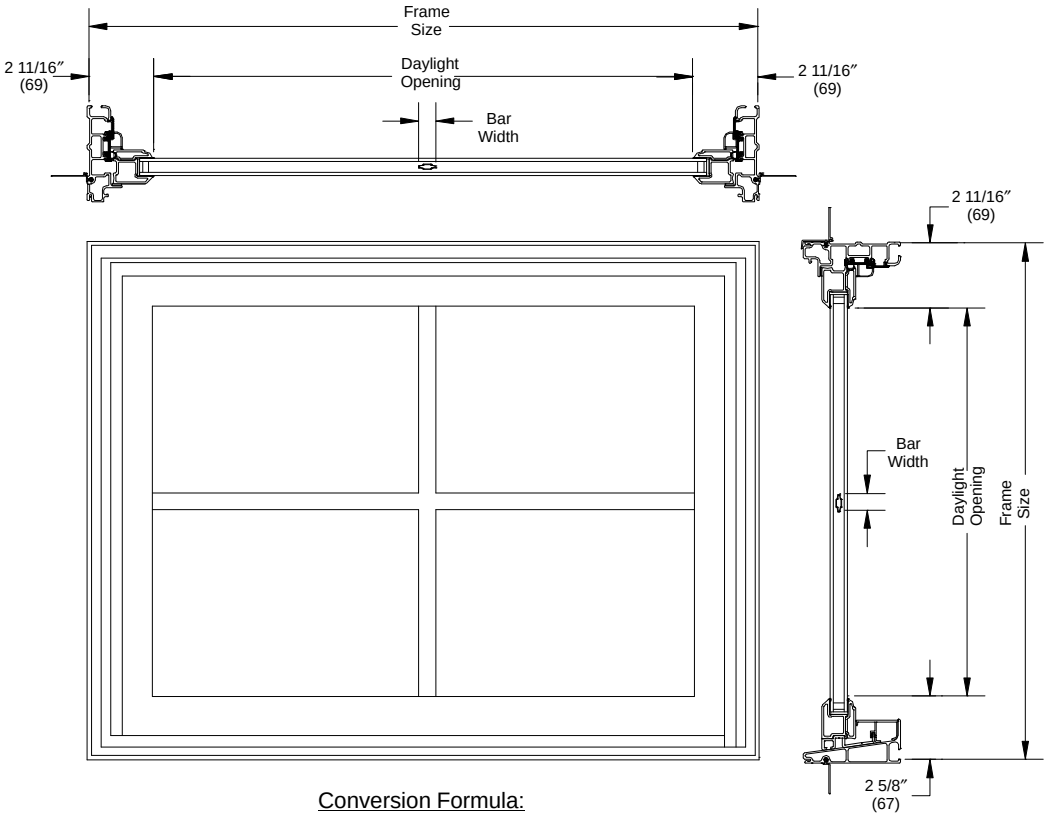

Conversion Formula:

$$\frac{\text{DLO} - \text{Total Bar(s) Width}}{\text{Number of Lites}} = \text{Individual DLO}$$

Bar Widths
SDL Bar Width = 7/8″
GBG Width = 11/16″

NOTE:
For additional information on individual daylight openings please contact your Infinity representative.