TABLE OF CONTENTS

Insert Double Hung

Product Specifications 1.2
Egress Guidelines 1.7
Egress Measurements 1.8
NFRC 1.9
Limited Sash Travel 1.13
Mulling Guidelines 1.15
Sizing/Measurement Conversions Operator 1.16
Sizing/Measurement Conversions Picture/Transom 1.17
Section Details – Operator 1.18
Section Details – Picture/Transom 1.19
Mullion Details 1.20
Divided Lite Options 1.21
Rectangular Daylight Opening Calculations 1.22
Panning Applications 1.24
Bay – Section Details 1.25
Bay – Minimum and Maximum Measurements 1.27

SECTION 08 54 13
ULTREX® INSERT DOUBLE HUNG WINDOW

PART 1 GENERAL

1.1 SECTION INCLUDES

A. Ultrex® insert [double hung] and related [stationary] window complete with hardware, glazing, weather strip, insect screen, [grilles–between–the–glass] and standard or specified anchors, trim, attachments, and accessories.

B. Ultrex® insert double hung [bay] window complete with hardware, glazing, weather strip, insect screen, [grilles–between–glass] head and insulated seat board and standard or specified anchors, fiberglass reinforced ABS, trim and attachments.

1.2 RELATED SECTIONS

A. Section 01 33 23–Submittal Procedures: Shop Drawings, Product Data, and Samples.

B. Section 01 62 00–Product Options.

C. Section 01 65 00–Product Delivery.

D. Section 01 66 00–Product Storage and Handling Requirements.

E. Section 01 71 00–Examination and Preparation.

F. Section 01 73 00–Execution.

G. Section 01 74 00–Cleaning and Waste Management.

H. Section 01 76 00–Protecting Installed Construction.

I. Section 06 22 00–Millwork: Wood trim other than furnished by window manufacture.

J. Section 07 92 00–Joint Sealants: Sill sealant and perimeter caulking.

K. Section 09 90 00–Paints and Coatings: Paint or stain other than factory applied finish.

1.3 REFERENCES

A. American Society for Testing and Materials (ASTM):

1. E283: Standard Test Method for Rate of Air Leakage through Exterior Windows, Curtain Walls, and Doors.
2. E 330: Standard Test Method for Structural Performance of Exterior Windows, Curtains Walls, and Doors by Uniform Static Air Pressure Difference.
3. E 547: Standard Test Method for Water Penetration of Exterior Windows, Curtain Walls, and Doors by Cyclic Static Air Pressure Differential.
4. E 774: Specification for Sealed Insulated Glass Units.
5. C 1036: Standard Specification for Flat Glass.

B. American Architectural Manufacturers Association / Window and Door Manufactures Association (AAMA / WDMA): 101 / I.S.2–97: Voluntary Specifications for Aluminum, Vinyl (PVC) and Wood Windows and Glass Doors.

C. Window and Door Manufacturers Association (WDMA): 101 / I.S.2–97 WDMA Hallmark Certification Program.

D. Sealed Insulating Glass Manufacturers Association Canada/ Insulating Glass Certification Council (IGMAC / IGCC).

E. American Architectural Manufacturers Association (AAMA): AAMA 613–98 Voluntary Performance Requirements and Test Procedures for Organic Coatings on Plastic Profiles.

F. National Fenestration Rating Council (NFRC): 100–97: Procedure for Determining Fenestration Product Thermal Properties.

1.4 SYSTEM DESCRIPTION

A. Design and Performance Requirements:

1. Window Units shall be designed to comply with AAMA / WDMA 101 I.S.2–97
   a. Double Hung: H–LC30 up to 44 X 75, H–LC25 up to 48 X 85 and H–LC25 extended sizes 54 x 72.
   b. Picture/Transom: F–LC30 up to 72X72
2. Air leakage shall not exceed the following when tested at H–LC30 – 1.57, H–LC25 – 1.75 according to ASTM E 283: H–LC30 – 0.30, H–LC25 – 0.30 cfm per square foot of frame.
3. No water penetration shall occur when units are tested at the following pressure according to ASTM E 547: H–LC30 – 4.5, H–LC25 3.75 psf.
4. Window assembly shall withstand the following positive or negative uniform static air pressure difference without damage when tested according to ASTM E 330: H–LC30 – 45, H–LC25 – 37.5 psf.

1.5 SUBMITTALS

A. Shop Drawings: Submit shop drawings under provisions of Section 01 33 23.

B. Product Data: Submit catalog data under provisions of Section 01 33 23.

C. Samples:

1. Submit corner section under provisions of Section 01 33 23.
2. Include glazing system, quality of construction, and specified finish.

D. Quality Control Submittals: Submit manufacturer's certifications indicating compliance with specified performance and design requirements under provisions of Section 01 33 23.

1.6 QUALITY ASSURANCE

A. Regulatory Requirements: Emergency Egress or Rescue: Comply with requirements for sleeping units of [IBC Basic Building Code] [_____].

1.7 DELIVERY

A. Comply with provisions of Section 01 65 00.

B. Deliver in original packaging and protect from weather.

1.8 STORAGE AND HANDLING

A. Store window units in an upright position in a clean and dry storage area above ground and protect from weather under provisions of Section 01 66 00.

1.9 WARRANTY

A. Windows shall be warranted to be free from defects in manufacturing, materials, and workmanship for a period of ten (10) years from purchase date.

B. Insulating glass shall be warranted against visible obstruction thru the glass caused by a failure of the insulating glass air seal for a period of twenty (20) years from the date of original purchase.

PART 2 PRODUCTS

2.1 MANUFACTURED UNITS

A. Description: Factory assembled Ultrex®. Infinity Insert Double Hung windows [and related picture units] as manufactured by Infinity Windows & Doors, West Fargo, North Dakota.

B. Description: Factory assembled Ultrex®. Infinity Insert Double Hung [bay] unit, [and related picture units] as manufactured by Infinity Windows & Doors, West Fargo, North Dakota. Configurations: [30] [45] degree bay].

2.2 ULTREX® INSERT DOUBLE HUNG MATERIALS

A. Frame: Ultrex®, a fiberglass reinforced pultrusion. Exterior and Interior 0.075 inch (2 mm) thick. Frame thickness: 7/8 inch (22 mm) head jamb, 7/8 inch (22 mm) composite side jamb, 25/32 inches (20 mm) sill, with 8 degree bevel. Frame width: 31/4 inches (83mm).

B. Sash: Ultrex®, a fiberglass reinforced pultrusion. Exterior and Interior 0.075 inch (2mm) thick. Composite sash thickness: 1–3/8 inches (35 mm) for operating units. Sash exterior Ultrex®, a fiberglass reinforced pultrusion, 0.080 inch (2 mm) thick. Operable sash tilt to interior for cleaning or removal.

C. Glazing: Select quality complying with ASTM C 1036. Insulating glass IGCC certified to performance level CBA when tested in accordance with ASTM E 774.

1. Glazing method:
   [Insulating glass] [Altitude adjusted]
2. Glass type:
   [LoĒ-179™ with Argon gas]
   [LoĒ–179 with Argon gas Tempered]
   [LoĒ–179 with Argon gas Obscured]
   [LoĒ–179 with Argon gas Tempered Obscured]
   [LoĒ^2–272® with Argon gas]
   [LoĒ^2–272 with Argon gas Tempered]
   [LoĒ^2–272 with Argon gas Obscured]
   [LoĒ^2–272 with Argon gas Tempered Obscured]
   [LoĒ^3-366® with Argon gas]
   [LoĒ^3-366 with Argon gas Tempered]
   [LoĒ^3-366 with Argon gas Obscured]
   [LoĒ^3-366 with Argon gas Tempered Obscured]
3. Glazing seal: Silicone bedding on interior; silicone bedding on exterior.

D. Simulated Divided Lites (SDL): 7/8 inch (22mm) wide with internal aluminum spacer bars. Exterior bar: Ultrex®, finish to match exterior [Stone White] [Sierra] [Pebble Gray] [Bronze] [Cashmere] [Bahama Brown]. Interior bar: ABS (Acrylonitrile Butadiene Styrene) [Stone White] [Sierra] [EverWood™]. Patterns available: Equal Rectangle Lites, Prairie in 4, 6, and 9 lite patterns, Cottage, Oriel, and Checkrail.

E. Grilles Between the Glass: 11/16 by 7/32 inch (17 mm by 6 mm) profiled aluminum spacer between glass panes. Exterior Finish: [Stone White] [Sierra] [Pebble Gray] [Bronze] [Cashmere] [Bahama Brown]. Interior Finish: [Stone White] [Satin Taupe] [Sierra] [Bronze]. Patterns available: Equal Rectangle Lites, Prairie in 4, 6, and 9 lite patterns, Cottage, Oriel, and Checkrail.

F. Cottage Style: Sash divided 2/5 over 3/5. Oriel Style: Sash divided 3/5 over 2/5.

G. Finish:

1. Exterior: Ultrex®, a fiberglass reinforced pultrusion with co–extruded Acrylic finish. Color: [Stone White] [Sierra] [Pebble Gray] [Bronze] [Cashmere] [Bahama Brown].
2. Interior: Ultrex®, a fiberglass reinforced pultrusion with co–extruded Acrylic finish. Color: [Stone White] [Sierra] [EverWood™].

H. Hardware:

1. Balance system: Coil spring block and tackle with nylon cord and fiber filled nylon clutch.
2. Lock: zinc die–cast lock and keeper: Color: [White] [Satin Taupe] [Sierra] [Brass] [Satin Nickel] [Oil Rubbed Bronze]. Extended sizes – two locks and two keepers.
3. Lift: Color: [White] [Satin Taupe] [Sierra] [Brass] [Satin Nickel] [Oil Rubbed Bronze]. Extended sizes – two lifts.

I. Weather Strip: Unit has weather strip at jambs with a foam type material for added long term performance to seal against both the bottom sash and top sash stiles. The bottom sash has a weather strip to seal against the sill, the top check rail has a weather strip to seal against the bottom check rail, and the top rail seals against a weather strip on the head jamb parting stop. Color: White. Stationary units: Continuous, foam weather strip at perimeter of sash. Color: Gray.

J. Insect Screens: Factory installed (removable) [half screen] [full screen]. Screen cloth [18 by 16 mesh: Charcoal Fiberglass] [20 x 20 mesh: Charcoal High Transparency Fiberglass]. Frame color: [Stone White] [Sierra] [Pebble Gray] [Bronze] [Cashmere] [Bahama Brown].

K. Head/Seat Board: (for use with bow and bay assemblies) factory installed [bare pine] [oak] interior head board and seat board. Insulated seat board with white or beige exterior aluminum skin.

L. Bay Cable Support.

M. Bow and Bay jambs available from 4 9/16 – 8 9/16 inch.

2.3 ACCESSORIES AND TRIM

A. Installation Accessories:

1. Package of installation hardware consisting of:
   a. Four #8 x 2″ Torx® truss head installation screws
   b. Six jamb hole plugs
   c. One sash lift (two sash lifts on extended sizes)
   d. Two sash lift hole plugs (Four sash lift hole plugs on extended sizes)
   e. Two #7 x 3/4″ Phillips flat head screws (for sash lift) (four screws on extended sizes)
   f. Keeper pile weather strip (EverWood™ only) (two weather strip on extended sizes)
   g. EverWood™ test strip (EverWood™ only)
   h. Paint and Stain Instructions (EverWood™ only)
2. Picture /Transom package of installation hardware consisting of:
   a. Twelve #8 x 2″ Torx® truss head installation screws.
   b. EverWood™ test strip (EverWood™ only)
   c. Paint and Stain Instructions (EverWood™ only)
3. Sill Installation Filler
   a. 108″ length
4. Mulling Accesssories
   a. Exterior mull cover
   b. Mull post
   c. Interior mull cover
   d. Shipping bracket assembly
   e. Mull tape – one–sided
   f. #10 x 1 1/8″ screw
   g. Foam block kit

B. Panning Accessories

1. Fiberglass reinforced ABS:
   a. Profile; [Frame expander] as indicated on drawings.
   b. Color: Stone White, Sierra, Pebble Gray, Bronze, Cashmere or Bahama Brown.
2. Aluminum Extrusions:
   a. Profile: [coil panning] as indicated on drawings. Finish: High solids polyester. Color: Stone White, Sierra, Pebble Gray, Bronze, Cashmere or Bahama Brown.

PART 3 EXECUTION

3.1 EXAMINATION

A. Verification of Conditions: Before installation, verify openings are plumb, square, and of proper dimension as required in Section 01 71 00. Report frame defects or unsuitable conditions to the General Contractor before proceeding.

B. Acceptance of Conditions: Beginning of installation confirms acceptance of existing conditions.

3.2 INSTALLATION

A. Comply with Section 01 73 00.

B. Assemble and install window unit according to manufacturer's instructions and reviewed shop drawings.

C. Install sealant and related backing materials at perimeter of unit or assembly in accordance with Section 07 92 00 Joint Sealants. Do not use expansive foam sealant.

D. Install accessory items as required.

3.3 CLEANING

A. Remove visible labels and adhesive residue from glass according to manufacturer's instructions.

B. Leave windows and glass in a clean condition. Final cleaning as required in Section 01 74 00.

3.4 PROTECTING INSTALLED CONSTRUCTION

A. Comply with Section 01 76 00.

B. Protect windows from damage by chemicals, solvents, paint, or other construction operations that may cause damage.

END OF SECTION

Egress Unit Minimum Openings and Conversions from Insert Frame Size – Equal Sash		
Minimum Value for Net Clear Opening*	**Desired Dimension**	**Formula**
20 in	Egress opening width, in	=NINDH frame OM width – 2.694
24 in	Egress opening height, in	=(NINDH frame OM height /2) – 5.722
5.7ft^2	Egress opening area, ft^2	=((Egress opening width, in) x (Egress height, in)) /144

* Must meet/exceed all three minimum values to meet egress. Limited travel may affect egress opening height.

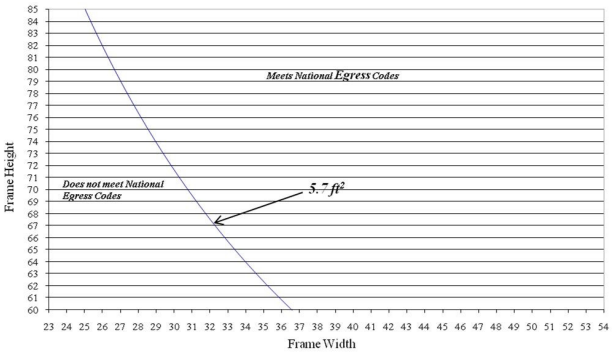

Egress Unit Minimum Openings and Conversions from Insert Frame Size – Cottage Sash		
Minimum Value for Net Clear Opening*	**Desired Dimension**	**Formula**
20 in	Egress opening width, in	=NINDH frame OM width – 2.694
24 in	Egress opening height, in	=(NINDH frame OM height /2.5) – 5.172
5.7ft^2	Egress opening area, ft^2	=((Egress opening width, in) x (Egress height, in)) /144

* Must meet/exceed all three minimum values to meet egress. Limited travel may affect egress opening height.

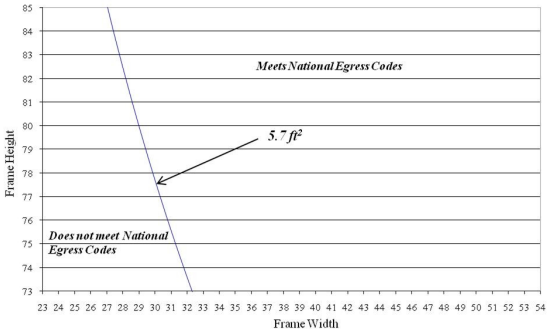

Egress Unit Minimum Openings and Conversions from Insert Frame Size – Oriel Sash		
Minimum Value for Net Clear Opening*	**Desired Dimension**	**Formula**
20 in	Egress opening width, in	=NINDH frame OM width – 2.694
24 in	Egress opening height, in	=(NINDH frame OM height /2.5) – 5.406
5.7ft^2	Egress opening area, ft^2	=((Egress opening width, in) x (Egress height, in)) /144

* Must meet/exceed all three minimum values to meet egress. Limited travel may affect egress opening height.

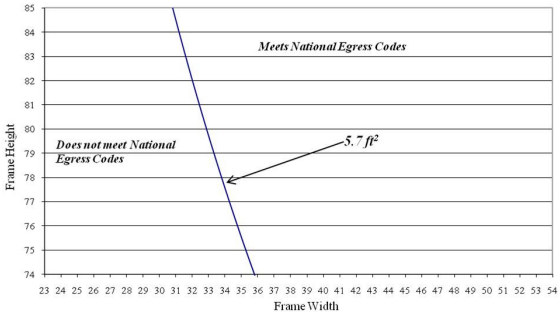

NOTE: Consult an Infinity sales and support representative to determine the exact clear/egress opening for your configuration.

INFINITY INSERT DOUBLE HUNG

EGRESS MEASUREMENTS

International Building Code – 2000
Section 1009 Emergency Escape and Rescue

1009.2 Minimum size: Emergency escape and rescue openings shall have a minimum net clear opening of 5.7 square feet (0.53m^2). Exception: The minimum net clear opening for emergency escape and rescue openings on the ground level at grade is 5.0 square feet (0.46m^2).

1009.2.1 Minimum dimensions: The minimum net clear opening height dimension shall be 24 inches (610 mm). The net clear opening width dimension shall be 20 inches (508 mm). The net clear opening dimensions shall be the result of normal operation of the opening.

1009.3 Maximum height from the floor: Emergency escape and rescue opening shall have the bottom of the clear opening not greater than 44 inches (1118 mm) measured from the floor.

1009.4 Operational constraints: Emergency escape and rescue openings shall be operational from the inside of the room without the use of keys or tools. Bars, grilles, grates, or similar devices are permitted to be placed over emergency escape and rescue openings provided the minimum net clear opening size complies with Section 1009.2 and such devices shall be releasable or removable from the inside without the use of a key, tool, or force greater than that which is required for normal operation of the escape and rescue opening.

Code restrictions may vary depending on your local building codes.

Note: Refer to page 2.1 for inside opening illustration.

NINDH EGRESS MEASUREMENTS

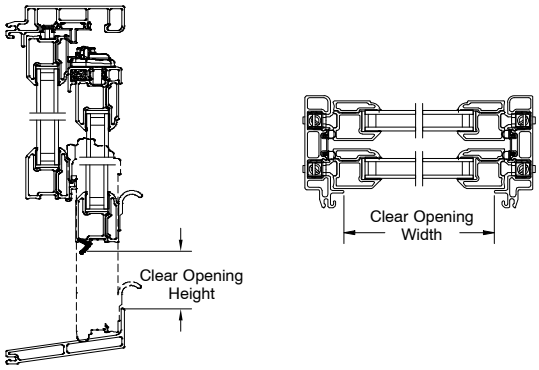

* When installed in accordance to recommended measuring and installation guidelines, these sizes meet national egress codes for fire evacuation. Local codes may differ.

THERMAL PERFORMANCE VALUES Infinity Insert Double Hung 3.0 mm Size Tested 47 x 59 (1200 x 1500)					
ENERGY DATA	**U–Value**	**R–Value**	**SHGC**	**VLT**	**Energy Star**
Insulating Glass LoĒ 179™ - Air	0.35	2.86	0.54	0.61	
Insulating Glass LoĒ 179 – Argon	0.31	3.23	0.54	0.61	N
Insulating Glass LoĒ 179 – Air GBG	0.35	2.86	0.48	0.54	
Insulating Glass LoĒ 179 – Argon GBG	0.31	3.23	0.49	0.54	N
Insulating Glass LoĒ 179 – Air SDL	0.35	2.86	0.48	0.54	
Insulating Glass LoĒ 179 – Argon SDL	0.31	3.23	0.49	0.54	N
Insulating Glass LoĒ 179 - Air Obscure	0.35	2.86	0.54	0.61	
Insulating Glass LoĒ 179 – Argon Obscure	0.31	3.23	0.54	0.61	N
Insulating Glass LoĒ 179 – Air GBG Obscure	0.35	2.86	0.48	0.54	
Insulating Glass LoĒ 179 – Argon GBG Obscure	0.31	3.23	0.49	0.54	N
Insulating Glass LoĒ 179 – Air SDL Obscure	0.35	2.86	0.48	0.54	
Insulating Glass LoĒ 179 – Argon SDL Obscure	0.31	3.23	0.49	0.54	N
Insulating Glass LoĒ^2 272® - Air	0.34	2.94	0.33	0.56	
Insulating Glass LoĒ^2 272 – Argon	0.30	3.33	0.32	0.56	N, NC
Insulating Glass LoĒ^2 272 – Air GBG	0.35	2.86	0.29	0.50	SC
Insulating Glass LoĒ^2 272 – Argon GBG	0.31	3.23	0.29	0.50	NC, SC
Insulating Glass LoĒ^2 272 – Air SDL	0.35	2.86	0.29	0.50	SC
Insulating Glass LoĒ^2 272 – Argon SDL	0.31	3.23	0.29	0.50	NC, SC
Insulating Glass LoĒ^2 272 – Air Obscure	0.34	2.94	0.33	0.56	
Insulating Glass LoĒ^2 272 – Argon Obscure	0.30	3.33	0.32	0.56	N, NC
Insulating Glass LoĒ^2 272 – Air GBG Obscure	0.35	2.86	0.29	0.50	SC
Insulating Glass LoĒ^2 272 – Argon GBG Obscure	0.31	3.23	0.29	0.50	NC, SC
Insulating Glass LoĒ^2 272 – Air SDL Obscure	0.35	2.86	0.29	0.50	SC
Insulating Glass LoĒ^2 272 – Argon SDL Obscure	0.31	3.23	0.29	0.50	NC, SC
Insulating Glass LoĒ^3 366® – Air	0.33	3.03	0.22	0.50	SC, S
Insulating Glass LoĒ^3 366 – Argon	0.29	3.45	0.22	0.50	N, NC, SC, S
Insulating Glass LoĒ^3 366 – Air GBG	0.34	2.94	0.20	0.45	SC, S
Insulating Glass LoĒ^3 366 – Argon GBG	0.30	3.33	0.19	0.45	N, NC, SC, S
Insulating Glass LoĒ^3 366 – Air SDL	0.34	2.94	0.20	0.45	SC, S
Insulating Glass LoĒ^3 366 – Argon SDL	0.30	3.33	0.19	0.45	N, NC, SC, S
Insulating Glass LoĒ^3 366 – Air Obscure	0.33	3.03	0.22	0.50	SC, S
Insulating Glass LoĒ^3 366 – Argon Obscure	0.29	3.45	0.22	0.50	N, NC, SC, S
Insulating Glass LoĒ^3 366 – Air GBG Obscure	0.34	2.94	0.20	0.45	SC, S
Insulating Glass LoĒ^3 366 – Argon GBG Obscure	0.30	3.33	0.19	0.45	N, NC, SC, S
Insulating Glass LoĒ^3 366 – Air SDL Obscure	0.34	2.94	0.20	0.45	SC, S
Insulating Glass LoĒ^3 366 – Argon SDL Obscure	0.30	3.33	0.19	0.45	N, NC, SC, S

Product Values are determined using the National Fenestration Rating Council Procedures fro determining fenestration product values.

U–Value: (Btu/hr–sq. ft–*F) Lower the U–value, the greater the resistance to heat flow and better its insulating value.

R–Value: (1/U–Value) Higher the R–Value, the greater the resistance to heat flow and better its insulating value.

VLT: Visible Light Transmittance – Percentage of visible light transmitted through the unit.

SHGC: Solar Heat Gain Coefficient: The lower a window's SHGC , the less solar heat it transmits, and the greater it's shading ability.

NOTE: *Capillary tubes are required for IG units at high elevations. Argon will not be furnished in units with capillary tubes.*

THERMAL PERFORMANCE VALUES Infinity Insert Double Hung Picture/Transom 3.0 mm Size Tested 48 x 48 (1219 x 1219)					
ENERGY DATA	**U–Value**	**R–Value**	**SHGC**	**VLT**	**Energy Star**
Insulating Glass LoĒ 179™ - Air	0.33	3.03	0.56	0.64	
Insulating Glass LoĒ 179 – Argon	0.29	3.45	0.57	0.64	N
Insulating Glass LoĒ 179 – Air GBG	0.33	3.03	0.51	0.57	
Insulating Glass LoĒ 179 – Argon GBG	0.29	3.45	0.51	0.57	N
Insulating Glass LoĒ 179 – Air SDL	0.33	3.03	0.51	0.57	
Insulating Glass LoĒ 179 – Argon SDL	0.29	3.45	0.51	0.57	N
Insulating Glass LoĒ 179 - Air Obscure	0.33	3.03	0.56	0.64	
Insulating Glass LoĒ 179 – Argon Obscure	0.29	3.45	0.57	0.64	N
Insulating Glass LoĒ 179 – Air GBG Obscure	0.33	3.03	0.51	0.57	
Insulating Glass LoĒ 179 – Argon GBG Obscure	0.29	3.45	0.51	0.57	N
Insulating Glass LoĒ 179 – Air SDL Obscure	0.33	3.03	0.51	0.57	
Insulating Glass LoĒ 179 – Argon SDL Obscure	0.29	3.45	0.51	0.57	N
Insulating Glass LoĒ^2 272® - Air	0.32	3.13	0.34	0.58	NC
Insulating Glass LoĒ^2 272 – Argon	0.28	3.57	0.34	0.58	N, NC
Insulating Glass LoĒ^2 272 – Air GBG	0.33	3.03	0.31	0.52	
Insulating Glass LoĒ^2 272 – Argon GBG	0.29	3.45	0.31	0.52	N, NC, SC
Insulating Glass LoĒ^2 272 – Air SDL	0.33	3.03	0.31	0.52	
Insulating Glass LoĒ^2 272 – Argon SDL	0.29	3.45	0.31	0.52	N, NC, SC
Insulating Glass LoĒ^2 272 – Air Obscure	0.32	3.13	0.34	0.58	NC
Insulating Glass LoĒ^2 272 – Argon Obscure	0.28	3.57	0.34	0.58	N, NC
Insulating Glass LoĒ^2 272 – Air GBG Obscure	0.33	3.03	0.31	0.52	
Insulating Glass LoĒ^2 272 – Argon GBG Obscure	0.29	3.45	0.31	0.52	N, NC, SC
Insulating Glass LoĒ^2 272 – Air SDL Obscure	0.33	3.03	0.31	0.52	
Insulating Glass LoĒ^2 272 – Argon SDL Obscure	0.29	3.45	0.31	0.52	N, NC, SC
Insulating Glass LoĒ^3 366® – Air	0.31	3.23	0.23	0.52	NC, SC, S
Insulating Glass LoĒ^3 366 – Argon	0.27	3.70	0.22	0.52	N, NC, SC, S
Insulating Glass LoĒ^3 366 – Air GBG	0.32	3.13	0.21	0.47	NC, SC, S
Insulating Glass LoĒ^3 366 – Argon GBG	0.28	3.57	0.20	0.47	N, NC, SC, S
Insulating Glass LoĒ^3 366 – Air SDL	0.32	3.13	0.21	0.47	NC, SC, S
Insulating Glass LoĒ^3 366 – Argon SDL	0.28	3.57	0.20	0.47	N, NC, SC, S
Insulating Glass LoĒ^3 366 – Air Obscure	0.31	3.23	0.23	0.52	NC, SC, S
Insulating Glass LoĒ^3 366 – Argon Obscure	0.27	3.70	0.22	0.52	N, NC, SC, S
Insulating Glass LoĒ^3 366 – Air GBG Obscure	0.32	3.13	0.21	0.47	NC, SC, S
Insulating Glass LoĒ^3 366 – Argon GBG Obscure	0.28	3.57	0.20	0.47	N, NC, SC, S
Insulating Glass LoĒ^3 366 – Air SDL Obscure	0.32	3.13	0.21	0.47	NC, SC, S
Insulating Glass LoĒ^3 366 – Argon SDL Obscure	0.28	3.57	0.20	0.47	N, NC, SC, S

Product Values are determined using the National Fenestration Rating Council Procedures fro determining fenestration product values.

U–Value: (Btu/hr–sq. ft–*F) Lower the U–value, the greater the resistance to heat flow and better its insulating value.

R–Value: (1/U–Value) Higher the R–Value, the greater the resistance to heat flow and better its insulating value.

VLT: Visible Light Transmittance – Percentage of visible light transmitted through the unit.

SHGC: Solar Heat Gain Coefficient: The lower a window's SHGC , the less solar heat it transmits, and the greater it's shading ability.

NOTE: *Capillary tubes are required for IG units at high elevations. Argon will not be furnished in units with capillary tubes.*

THERMAL PERFORMANCE VALUES Infinity Insert Double Hung Picture/Transom 4.0 mm Size Tested 48 x 48 (1219 x 1219)					
ENERGY DATA	**U–Value**	**R–Value**	**SHGC**	**VLT**	**Energy Star**
Insulating Glass LoĒ 179 ™ - Air	0.35	2.86	0.55	0.63	
Insulating Glass LoĒ 179 – Argon	0.30	3.33	0.55	0.63	N
Insulating Glass LoĒ 179 – Air GBG	0.36	2.77	0.49	0.57	
Insulating Glass LoĒ 179 – Argon GBG	0.31	3.23	0.50	0.57	N
Insulating Glass LoĒ 179 – Air SDL	0.35	2.86	0.49	0.57	
Insulating Glass LoĒ 179 – Argon SDL	0.30	3.33	0.50	0.57	N
Insulating Glass LoĒ 179 - Air Obscure	0.35	2.86	0.55	0.63	
Insulating Glass LoĒ 179 – Argon Obscure	0.30	3.33	0.55	0.63	N
Insulating Glass LoĒ 179 – Air GBG Obscure	0.36	2.77	0.49	0.57	
Insulating Glass LoĒ 179 – Argon GBG Obscure	0.28	3.57	0.50	0.57	N
Insulating Glass LoĒ 179 – Air SDL Obscure	0.35	2.86	0.49	0.57	
Insulating Glass LoĒ 179 – Argon SDL Obscure	0.30	3.33	0.50	0.57	N
Insulating Glass LoĒ^2 272® - Air	0.33	3.03	0.58	0.58	
Insulating Glass LoĒ^2 272 – Argon	0.29	3.45	0.34	0.58	N, NC
Insulating Glass LoĒ^2 272 – Air GBG	0.36	2.77	0.31	0.52	
Insulating Glass LoĒ^2 272 – Argon GBG	0.31	3.23	0.30	0.52	N, NC, SC
Insulating Glass LoĒ^2 272 – Air SDL	0.35	2.86	0.31	0.52	
Insulating Glass LoĒ^2 272 – Argon SDL	0.30	3.33	0.30	0.52	N, NC, SC
Insulating Glass LoĒ^2 272 – Air Obscure	0.33	3.03	0.34	0.58	
Insulating Glass LoĒ^2 272 – Argon Obscure	0.29	3.45	0.34	0.58	N, NC
Insulating Glass LoĒ^2 272 – Air GBG Obscure	0.35	2.86	0.31	0.52	
Insulating Glass LoĒ^2 272 – Argon GBG Obscure	0.30	3.33	0.30	0.52	N, NC, SC
Insulating Glass LoĒ^2 272 – Air SDL Obscure	0.35	2.86	0.31	0.52	
Insulating Glass LoĒ^2 272 – Argon SDL Obscure	0.30	3.33	0.30	0.52	N, NC, SC
Insulating Glass LoĒ^3 366® – Air	0.33	3.03	0.23	0.52	SC, S
Insulating Glass LoĒ^3 366 – Argon	0.28	3.57	0.23	0.52	N, NC, SC, S
Insulating Glass LoĒ^3 366 – Air GBG	0.34	2.94	0.21	0.46	SC, S
Insulating Glass LoĒ^3 366 – Argon GBG	0.29	3.45	0.21	0.46	N, NC, SC, S
Insulating Glass LoĒ^3 366 – Air SDL	0.34	2.94	0.21	0.46	SC, S
Insulating Glass LoĒ^3 366 – Argon SDL	0.29	3.45	0.21	0.46	N, NC, SC, S
Insulating Glass LoĒ^3 366 – Air Obscure	0.33	3.03	0.23	0.52	SC, S
Insulating Glass LoĒ^3 366 – Argon Obscure	0.28	3.57	0.23	0.52	N, NC, SC, S
Insulating Glass LoĒ^3 366 – Air GBG Obscure	0.34	2.94	0.21	0.46	SC, S
Insulating Glass LoĒ^3 366 – Argon GBG Obscure	0.29	3.45	0.21	0.46	N, NC, SC, S
Insulating Glass LoĒ^3 366 – Air SDL Obscure	0.34	2.94	0.21	0.46	SC, S
Insulating Glass LoĒ^3 366 – Argon SDL Obscure	0.29	3.45	0.21	0.46	N, NC, SC, S

Product Values are determined using the National Fenestration Rating Council Procedures fro determining fenestration product values.

U–Value: (Btu/hr–sq. ft–*F) Lower the U–value, the greater the resistance to heat flow and better its insulating value.

R–Value: (1/U–Value) Higher the R–Value, the greater the resistance to heat flow and better its insulating value.

VLT: Visible Light Transmittance – Percentage of visible light transmitted through the unit.

SHGC: Solar Heat Gain Coefficient: The lower a window's SHGC , the less solar heat it transmits, and the greater it's shading ability.

NOTE: *Capillary tubes are required for IG units at high elevations. Argon will not be furnished in units with capillary tubes.*

THERMAL PERFORMANCE VALUES Infinity Insert Double Hung Picture/Transom 5.0 mm Size Tested 48 x 48 (1219 x 1219)					
ENERGY DATA	**U–Value**	**R–Value**	**SHGC**	**VLT**	**Energy Star**
Insulating Glass LoĒ 179 ™ - Air	0.37	2.70	0.54	0.63	
Insulating Glass LoĒ 179 – Argon	0.32	3.13	0.54	0.63	N
Insulating Glass LoĒ 179 – Air GBG	0.39	2.56	0.48	0.56	
Insulating Glass LoĒ 179 – Argon GBG	0.34	2.94	0.49	0.56	
Insulating Glass LoĒ 179 – Air SDL	0.37	2.70	0.48	0.56	
Insulating Glass LoĒ 179 – Argon SDL	0.32	3.13	0.49	0.55	N
Insulating Glass LoĒ 179 - Air Obscure	0.37	2.70	0.54	0.63	
Insulating Glass LoĒ 179 – Argon Obscure	0.32	3.13	0.54	0.63	N
Insulating Glass LoĒ 179 – Air GBG Obscure	0.39	2.56	0.48	0.56	
Insulating Glass LoĒ 179 – Argon GBG Obscure	0.34	2.94	0.49	0.56	
Insulating Glass LoĒ 179 – Air SDL Obscure	0.37	2.70	0.48	0.56	
Insulating Glass LoĒ 179 – Argon SDL Obscure	0.32	3.13	0.49	0.55	N
Insulating Glass LoĒ^2 272® - Air	0.36	2.78	0.34	0.57	
Insulating Glass LoĒ^2 272 – Argon	0.31	3.23	0.34	0.57	NC
Insulating Glass LoĒ^2 272 – Air GBG	0.38	2.63	0.31	0.51	
Insulating Glass LoĒ^2 272 – Argon GBG	0.33	3.03	0.30	0.51	SC
Insulating Glass LoĒ^2 272 – Air SDL	0.38	2.63	0.31	0.51	
Insulating Glass LoĒ^2 272 – Argon SDL	0.33	3.03	0.30	0.51	SC
Insulating Glass LoĒ^2 272 – Air Obscure	0.36	2.63	0.34	0.57	
Insulating Glass LoĒ^2 272 – Argon Obscure	0.31	3.23	0.34	0.57	NC
Insulating Glass LoĒ^2 272 – Air GBG Obscure	0.38	2.63	0.31	0.51	
Insulating Glass LoĒ^2 272 – Argon GBG Obscure	0.33	3.03	0.30	0.51	SC
Insulating Glass LoĒ^2 272 – Air SDL Obscure	0.38	2.63	0.31	0.51	
Insulating Glass LoĒ^2 272 – Argon SDL Obscure	0.33	3.03	0.30	0.51	SC
Insulating Glass LoĒ^3 366® – Air	0.36	2.63	0.24	0.52	S
Insulating Glass LoĒ^3 366 – Argon	0.31	3.23	0.23	0.52	NC, SC, S
Insulating Glass LoĒ^3 366 – Air GBG	0.38	2.63	0.21	0.46	S
Insulating Glass LoĒ^3 366 – Argon GBG	0.33	3.03	0.21	0.46	NC, SC, S
Insulating Glass LoĒ^3 366 – Air SDL	0.38	2.63	0.21	0.46	S
Insulating Glass LoĒ^3 366 – Argon SDL	0.33	3.03	0.21	0.46	SC, S
Insulating Glass LoĒ^3 366 – Air Obscure	0.36	2.78	0.24	0.52	S
Insulating Glass LoĒ^3 366 – Argon Obscure	0.31	3.23	0.23	0.52	NC, SC, S
Insulating Glass LoĒ^3 366 – Air GBG Obscure	0.38	2.63	0.21	0.46	S
Insulating Glass LoĒ^3 366 – Argon GBG Obscure	0.32	3.13	0.21	0.46	NC, SC, S
Insulating Glass LoĒ^3 366 – Air SDL Obscure	0.38	2.63	0.21	0.46	S
Insulating Glass LoĒ^3 366 – Argon SDL Obscure	0.33	3.03	0.21	0.46	SC, S

Product Values are determined using the National Fenestration Rating Council Procedures fro determining fenestration product values.

U–Value: (Btu/hr–sq. ft–*F) Lower the U–value, the greater the resistance to heat flow and better its insulating value.

R–Value: (1/U–Value) Higher the R–Value, the greater the resistance to heat flow and better its insulating value.

VLT: Visible Light Transmittance – Percentage of visible light transmitted through the unit.

SHGC: Solar Heat Gain Coefficient: The lower a window's SHGC , the less solar heat it transmits, and the greater it's shading ability.

NOTE: *Capillary tubes are required for IG units at high elevations. Argon will not be furnished in units with capillary tubes.*

LIMITED SASH TRAVEL – EQUAL

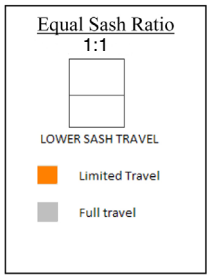

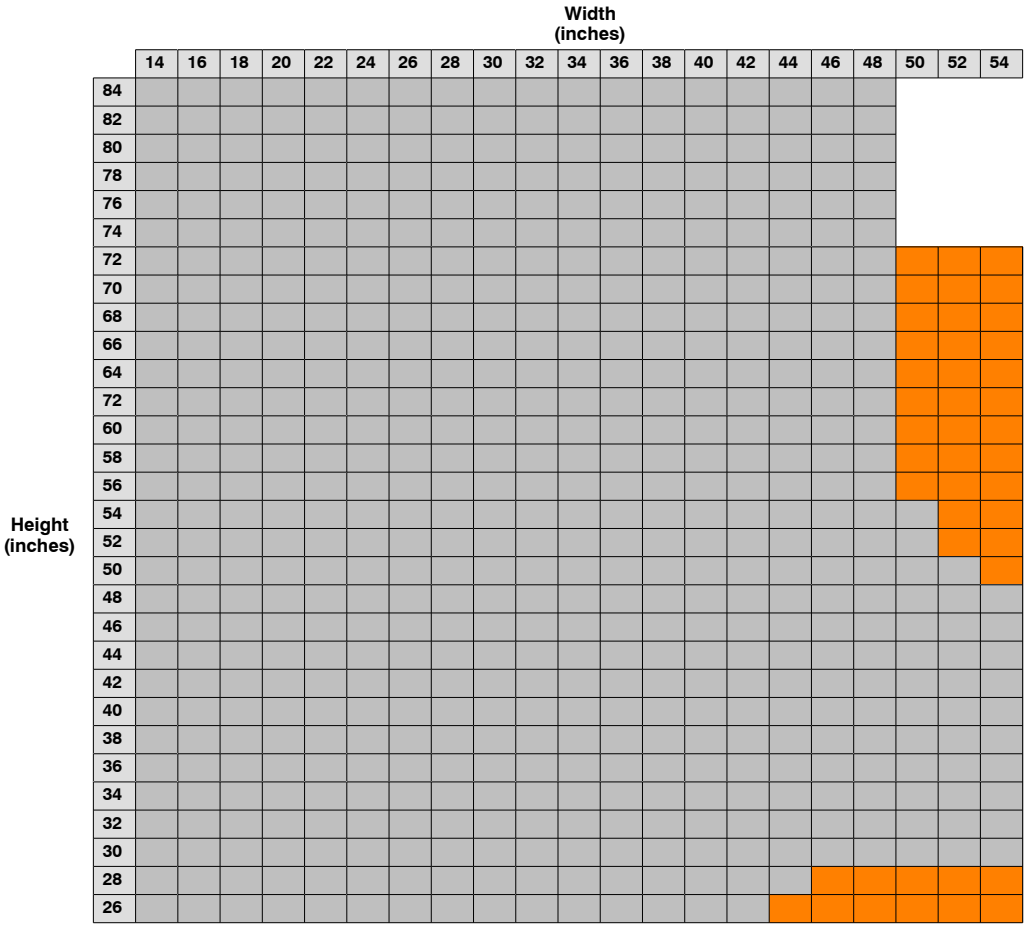

NOTE:
These charts are to determine what size units will have full and limited travel. Limited travel is defined as not being able to open the sash as much as the frame will allow. Full travel is defined as being able to open the sash as much as the frame will allow. Limited travel can effect clear openings and Egress conformity. The following charts are based on a one lite option (no grille pattern). Consult an Infinity Sales & Support rep. to determine the exact clear/egress opening for your configuration.

LIMITED SASH TRAVEL – COTTAGE AND ORIEL

INFINITY from MARVIN
REPLACEMENT WINDOWS

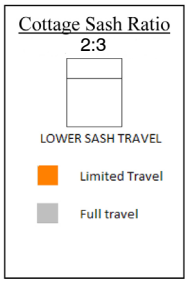

Width (inches)

Height (inches)	14	16	18	20	22	24	26	28	30	32	34	36	38	40	42	44	46	48	50	52	54
72																					
70																					
68																					
66																					
64																					
62																					
60																					
58																					
56																					
54																					
52																					
50																					
48																					
46																					
44																					
42																					
40																					
38																					
36																					
34																					
32																					
30																					
28																					
26																					

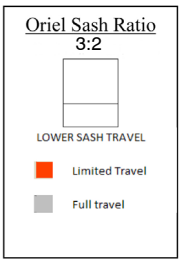

Width (inches)

Height (inches)	14	16	18	20	22	24	26	28	30	32	34	36	38	40	42	44	46	48	50	52	54
72																					
70																					
68																					
66																					
64																					
62																					
60																					
58																					
56																					
54																					
52																					
50																					
48																					
46																					
44																					
42																					
40																					
38																					
36																					
34																					
32																					
30																					
28																					
26																					

NOTE:
These charts are to determine what size units will have full and limited travel. Limited travel is defined as not being able to open the sash as much as the frame will allow. Full travel is defined as being able to open the sash as much as the frame will allow. Limited travel can effect clear openings and Egress conformity. The following charts are based on a one lite option (no grille pattern). Consult an Infinity Sales & Support rep. to determine the exact clear/egress opening for your configuration.

MULLING GUIDELINES FOR INSERT DOUBLE HUNG ASSEMBLIES*

Multiple assemblies can be factory mulled up to 4 units wide by 1 unit high
MAXIMUM INSIDE OPENING not to exceed 112 3/8″ X 85 1/4″

NOTE: FIELD MULLING BEYOND THE ABOVE LIMITATIONS IS NOT RECOMMENDED.

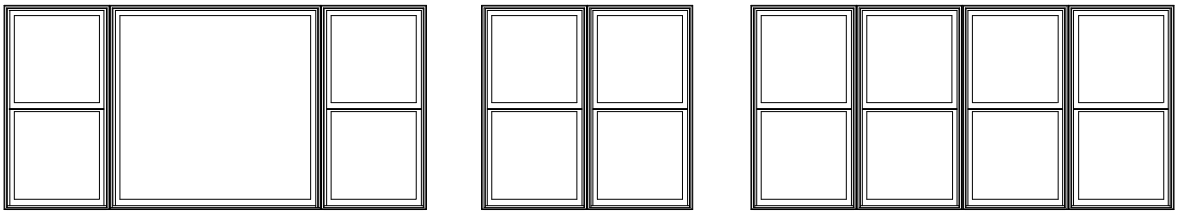

INSIDE OPENING TABLE FOR ASSEMBLIES

WIDTH: Unit Inside Opening width MINUS 3/8″ = Frame width. ADD **all** frame widths PLUS 3/8″ PLUS (3/8″ X number of mulls) = Total Inside Opening Width.

HEIGHT: Not applicable

*NOTE: Please contact Infinity Sales Support at 800–372–1072 for assistance when ordering field mulll products or questions with conversions

INFINITY INSERT DOUBLE HUNG

SIZING/MEASUREMENT CONVERSIONS – OPERATOR

Operator Size Guidelines						
Sash Configuration		Inside Opening Width		Inside Opening Height*		Glass Size Maximum Square Feet per Sash (square meters)
		Minimum	Maximum	Minimum	Maximum	
Equal	Standard Width	14 1/2″ (368)	48 3/8″ (1229)	25 3/4″ (654)	84 3/4″ (2153)	12.11 (1.13)
	Extended Width	48 25/64″ (1229)	54 3/8″ (1381)	25 3/4″ (654)	71 3/4″ (1813)	11.51 (1.07)
Cottage	Standard Width	14 1/2″ (368)	48 3/8″ (1229)	25 3/4″ (654)	71 3/4″ (1813)	8.10 (0.75) small/12.16 (1.13) large
	Extended Width	48 25/64″ (1229)	54 3/8″ (1381)	25 3/4″ (654)	59 3/4″ (1518)	7.55 (0.70) small/11.32 (1.05) large
Oriel	Standard Width	14 1/2″ (368)	48 3/8″ (1229)	25 3/4″ (654)	71 3/4″ (1813)	8.1 (0.75) small/12.16 (1.13) large
	Extended Width	48 25/64″ (1229)	54 3/8″ (1381)	25 3/4″ (654)	59 3/4″ (1518)	7.55 (0.70) small/11.32 (1.05) large

** Dimension varies with existing sill angle.*

Infinity Double Hung Measurement Conversions	
Inside Opening to Frame Size:	
Existing Sill Angle	Conversions
8° and greater	+ 1/4 (6)
7°	+ 3/16 (5)
6°	+ 1/8 (3)
5°	+ 1/16 (2)
4°	0 (0)
3°	– 1/16 (2)
2°	– 1/8 (3)
1°	– 3/16 (5)
0°	– 1/4 (6)

Frame size width = Inside Opening width minus 3/8″ (10)

Infinity Double Hung Measurement Conversions		
From Daylight Opening to:	Width	Height
Top Sash OM	+3 1/4″ (83)	+3 1/4″ (83)
Bottom Sash OM	+3 1/4″ (83)	+3 11/16″ (94)
Glass OM	+1 1/16″ (27)	+1 1/16″ (27)
Screen OM	+2 29/32″ (74)	Bottom DLO + Top DLO +5 29/32″ (150)

Infinity Double Hung Measurement Conversions				
From Frame OM to:	Width	Height	Cottage Height	Oriel Height
Top Sash OM	–1 15/16″ (49)	–5 1/2″ (140) x 0.5 + 2 3/16″ (56)	–5 1/2″ (140) x 0.4 + 2 3/16″ (56)	–5 1/2″ (140) x 0.6 + 2 3/16″ (56)
Bottom Sash OM	–1 15/16″ (49)	–5 1/2″ (140) x 0.5 + 2 19/32″ (66)	–5 1/2″ (140) x 0.6 + 2 19/32″ (66)	–5 1/2″ (140) x 0.4 + 2 19/32″ (66)
Top Sash Daylight Opening	–5 3/16″ (132)	–5 1/2″ (140) x 0.5 – 1 1/16″ (27)	–5 1/2″ (140) x 0.4 – 1 1/16″ (27)	–5 1/2″ (140) x 0.6 – 1 1/16″ (27)
Bottom Sash Daylight Opening	–5 3/16″ (132)	–5 1/2″ (140) x 0.5 – 1 1/16″ (27)	–5 1/2″ (140) x 0.6 – 1 1/16″ (27)	–5 1/2″ (140) x 0.4 – 1 1/16″ (27)
Top Sash Glass OM	–4 1/8″ (105)	–5 1/2″ (140) x 0.5	–5 1/2″ (140) x 0.4	–5 1/2″ (140) x 0.6
Bottom Sash Glass OM	–4 1/8″ (105)	–5 1/2″ (140) x 0.5	–5 1/2″ (140) x 0.6	–5 1/2″ (140) x 0.4
Screen OM	–2 9/32″ (58)	–1 23/32″ (44)	–1 23/32″ (44)	–1 23/32″ (44)

INFINITY INSERT DOUBLE HUNG

SIZING/MEASUREMENT CONVERSIONS – PICTURE/TRANSOM

Glazing Type	Picture/Transom Size Guidelines				Glass Size*** Maximum Square Feet
	Inside Opening Width		Inside Opening Height*		
	Minimum	Maximum**	Minimum	Maximum**	
Insulating Glass	14 1/2″ (368)	72 3/8″ (1838)	14 7/16″ (367)	71 3/4″ (1822)	30 sq. feet (2.76) sq. meters

* *Dimension varies with angle of sill.*

** *Glass size width or height must be less than 59″.* (For obscure options)
Tempered glass size width or height must be less that 60″.

*** *If glass size exceeds 25 square feet tempered option is required.*

Infinity Double Hung Measurement Conversions	
Inside Opening to Frame Size:	
Sill Angle	Conversions
8° and greater	+ 1/4 (6)
7°	+ 3/16 (5)
6°	+ 1/8 (3)
5°	+ 1/16 (2)
4°	0 (0)
3°	– 1/16 (2)
2°	– 1/8 (3)
1°	– 3/16 (5)
0°	– 1/4 (6)

Frame size width = Inside Opening width minus 3/8″ (10)

Infinity Double Hung Picture/Transom Measurement Conversions		
From Daylight Opening to:	Width	Height
Sash OM	+3 1/4″ (83)	+3 1/4″ (83)
Glass OM	+1 1/16″ (27)	+1 1/16″ (27)

Infinity Double Hung Picture/Transom Measurement Conversions		
From Frame OM to:	Width	Height
Sash OM	–1 15/16″ (49)	–2″ (51)
Daylight Opening	–5 3/16″ (132)	–5 1/4″ (133)
Glass OM	–4 1/8″ (105)	–4 3/16″ (106)

SECTION DETAILS–OPERATOR

SCALE 3″ = 1′ 0″

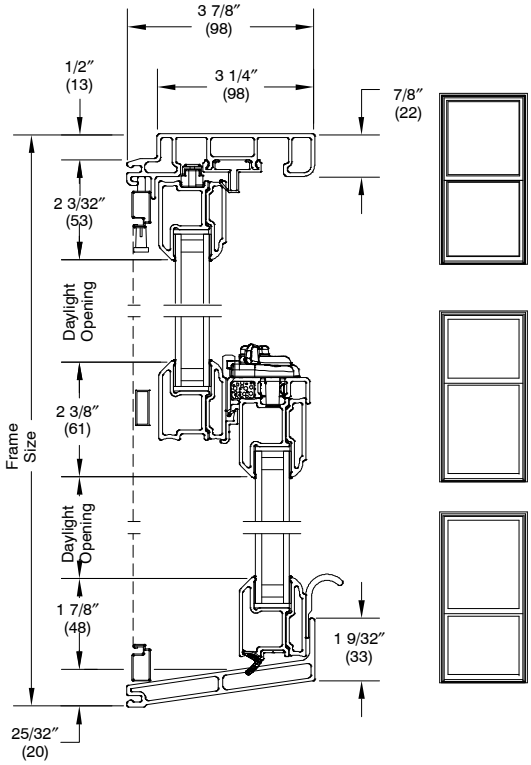

Head Jamb and Checkrail

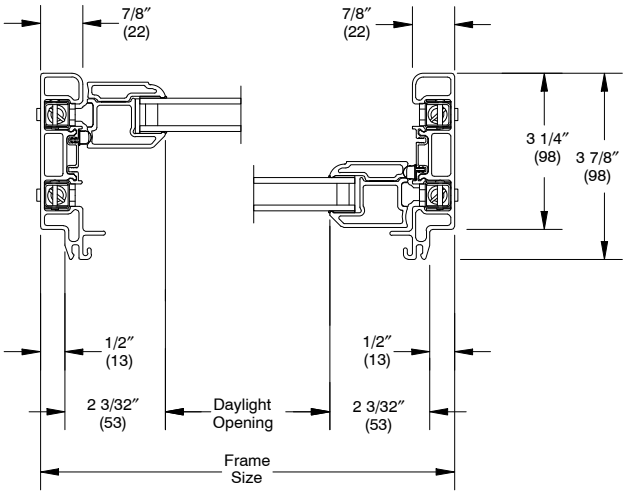

Jambs

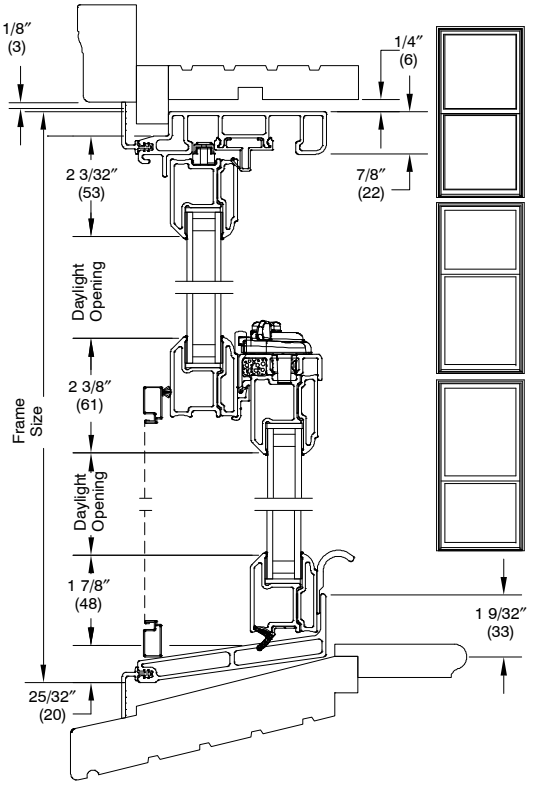

Head Jamb and Checkrail

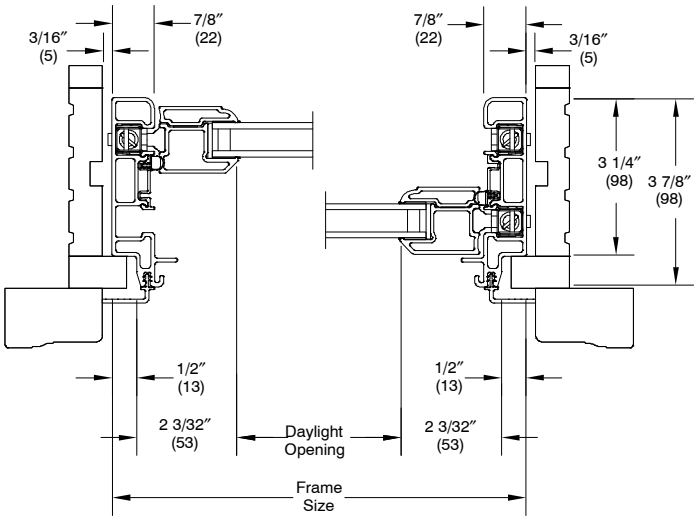

Jambs

INFINITY INSERT DOUBLE HUNG

SECTION DETAILS – PICTURE/TRANSOM

SCALE 3″ = 1′ 0″

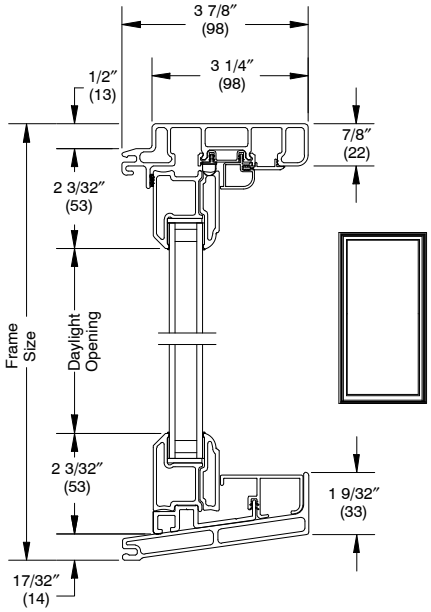

Picture/Transom Head Jamb

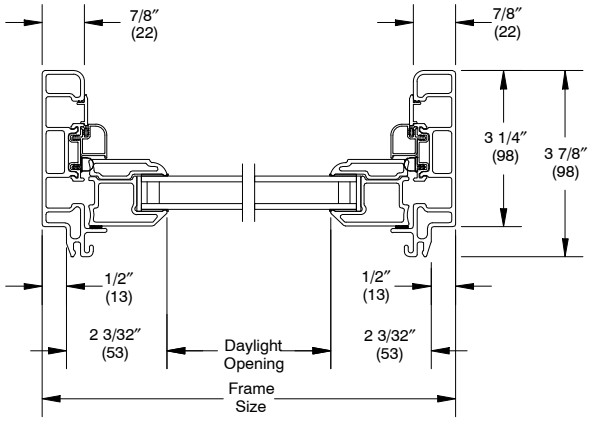

Jamb

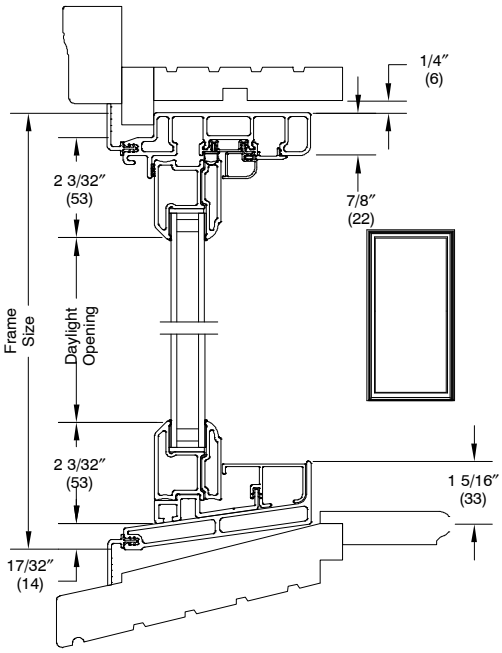

Picture/Transom Head Jamb

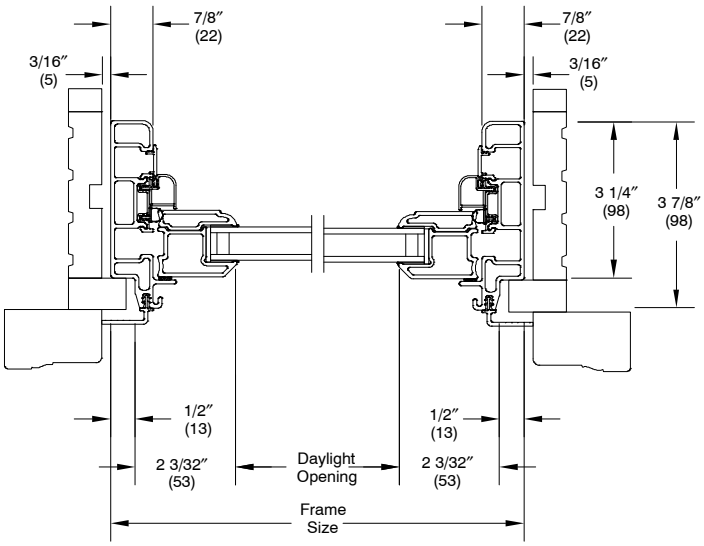

Jamb

MULLION DETAILS

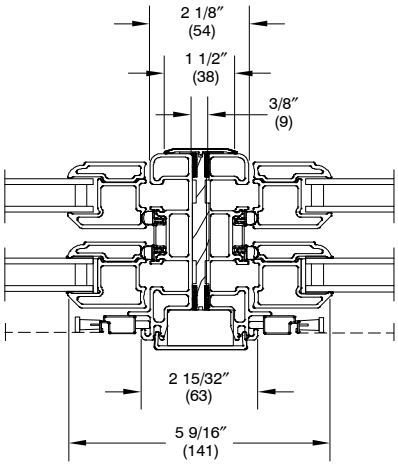

Vertical Mullion
Operator/Operator

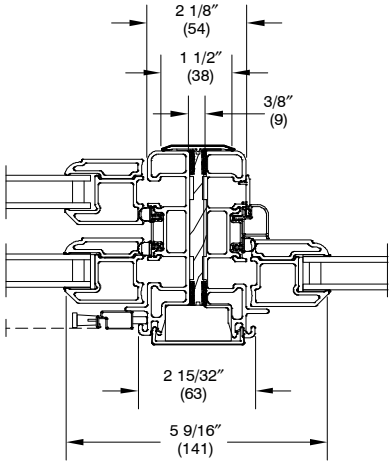

Vertical Mullion
Operator/Picture

DIVIDED LITE OPTIONS

NOT TO SCALE

Operator

Insulating Glass
Low E II Argon

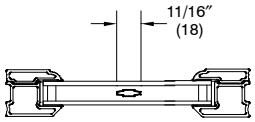

Insulating Glass
Low E II Argon GBG

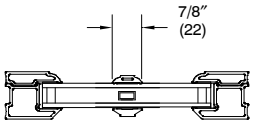

Insulating Glass
Low E II Argon
SDL w/spacer bar

Picture/Transom

Insulating Glass
Low E II Argon

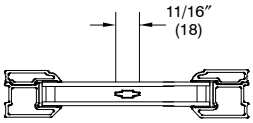

Insulating Glass
Low E II Argon GBG

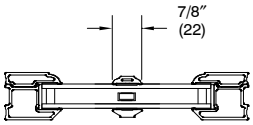

Insulating Glass
Low E II Argon
SDL w/spacer bar

NOTE:
SDL = Simulated Divided Lite
GBG = Grille Between Glass

RECTANGULAR DAYLIGHT OPENING CALCULATIONS

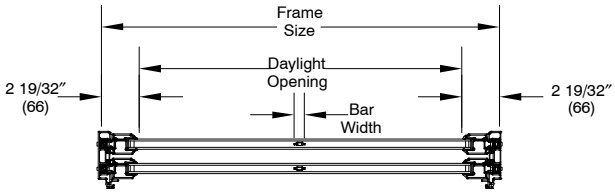

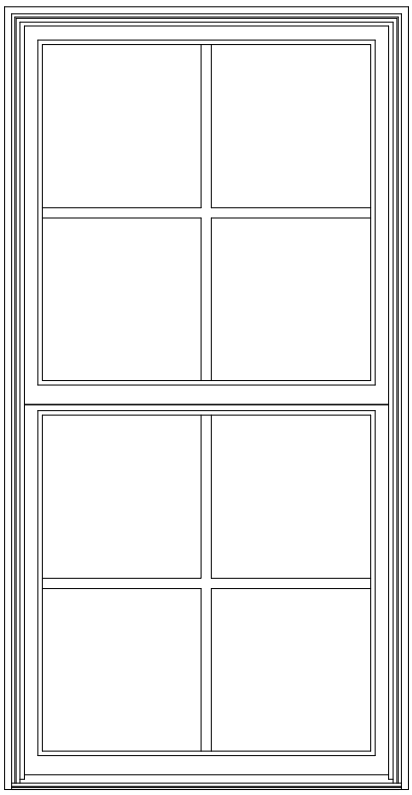

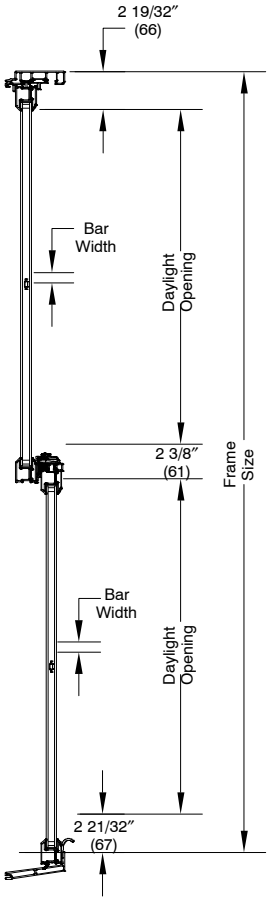

Conversion Formula:

$$\frac{\text{DLO} - \text{Total Bar(s) Width}}{\text{Number of Lites}} = \text{Individual DLO}$$

Bar Widths
SDL Bar Width = 7/8″
GBG Width = 11/16″

NOTE:
For additional information on individual daylight openings please contact your Infinity representative.

RECTANGULAR DAYLIGHT OPENING CALCULATIONS

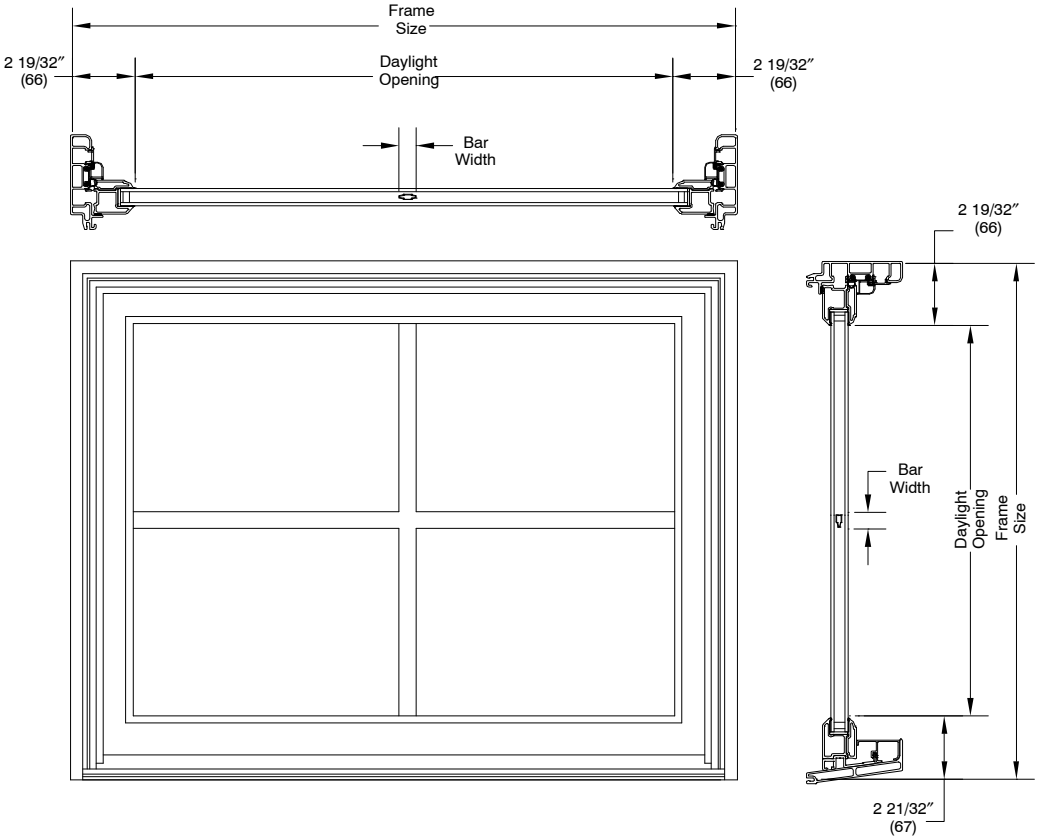

Conversion Formula:

$$\frac{\text{DLO} - \text{Total Bar(s) Width}}{\text{Number of Lites}} = \text{Individual DLO}$$

Bar Widths
SDL Bar Width = 7/8″
GBG Width = 11/16″

NOTE:
For additional information on individual daylight openings please contact your Infinity representative.

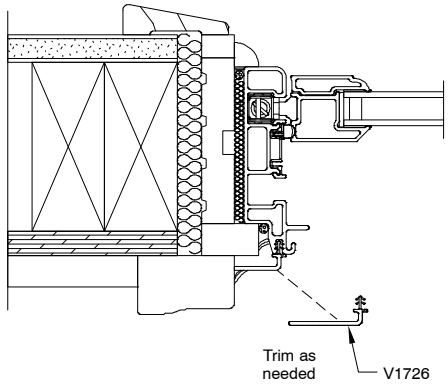

Jamb Frame Expander

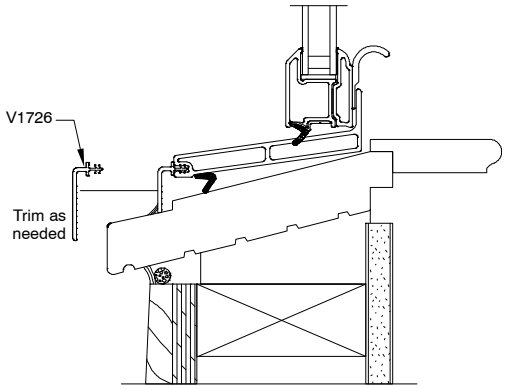

Sill Frame Expander

BAY – SECTION DETAILS

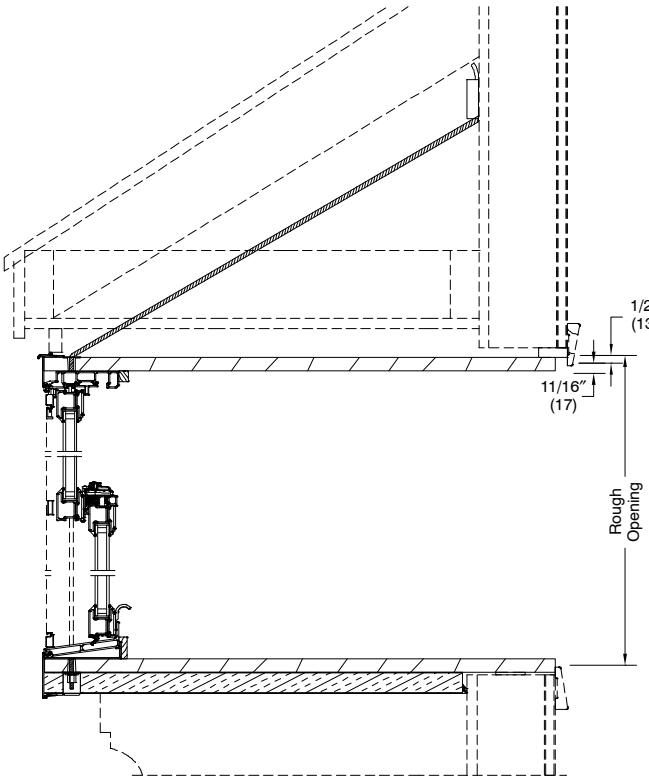

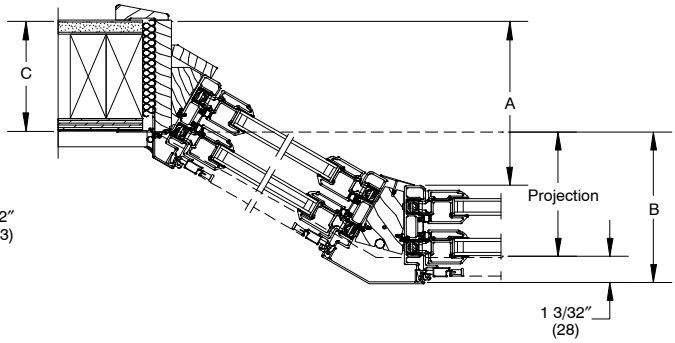

NINDH BAY
A = Projection – 2 15/16″ (75) + Jamb Depth
B = Projection + 1 3/32″ (28)

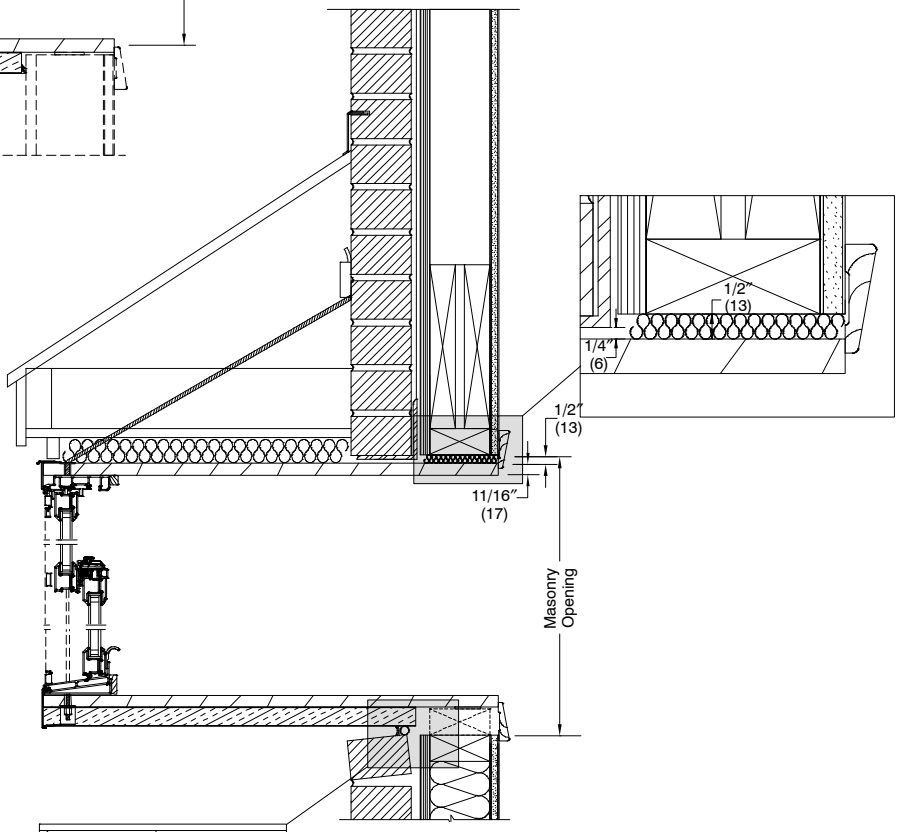

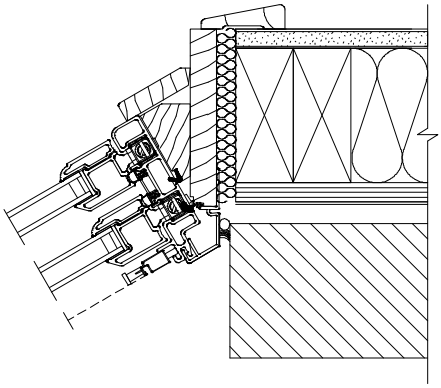

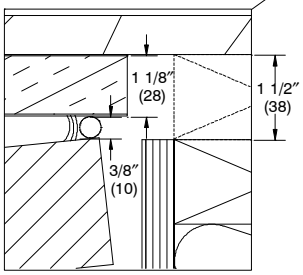

BAY – 45° & 30° SECTION DETAILS

45° Bay

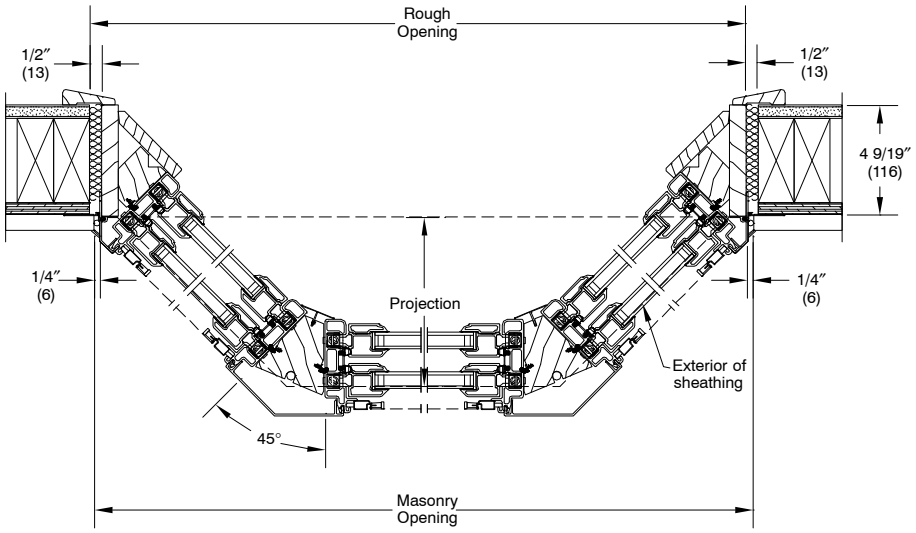

30° Bay

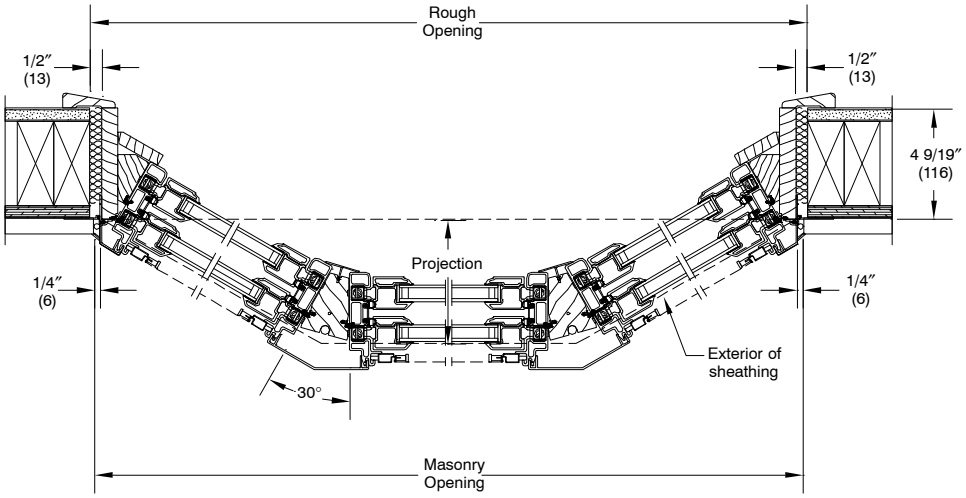

INFINITY INSERT DOUBLE HUNG

BAY – 45° & 30° MINIMUM & MAXIMUM MEASUREMENTS

Jamb Extension	
Minimum Jamb	4 9/16″
Maximum Jamb	8 9/16″

Minimum and Maximum Size Chart

Rough Opening	DOUBLE HUNG BAY							
	45° Bays				30° Bays			
	1:2:1 Ratio		1:1:1 Ratio		1:2:1 Ratio		1:1:1 Ratio	
	O – P – O	O – O – O	O – P – O	O – O – O	O – P – O	O – O – O	O – P – O	O – O – O
Minimum Width	56 5/16″	56 5/16″	42 3/16″	42 3/16″	59 1/2″	59 1/2″	45 3/8″	45 3/8″
Minimum Height	27 7/16″	27 7/16″	27 7/16″	27 7/16″	27 7/16″	27 7/16″	27 7/16″	27 7/16″
Maximum Width*	119 1/8″	90″	86 9/16″	86 9/16″	141 1/16″	96 5/16″	136″	136″
Maximum Height*	73 15/16″	86 15/16″	73 15/16″	86 15/16″	73 15/16″	86 15/16″	73 15/16″	86 15/16″

* Combination of maximum width and maximum height may not be available due to glass size, unit size, or projection constraints. Please verify size availability with MQS.

Window Size and Projection Chart

45 Degree Double Hung Bay

RO Width	1:2:1 Ratio			1:1:1 Ratio		
	Flanker Inside Opening	Center Inside Opening	Projection	Flanker Inside Opening	Center Inside Opening	Projection
50″				17 3/4″	17 3/4″	13 3/4″
55″				19 13/16″	19 13/16″	15 3/16″
60″	15 9/16″	30 3/4″	12 1/4″	21 7/8″	21 7/8″	16 11/16″
65″	17″	33 11/16″	13 1/4″	23 15/16″	23 15/16″	18 1/8″
70″	18 1/2″	36 5/8″	14 5/16″	26″	26″	19 5/8″
75″	19 15/16″	39 9/16″	15 5/16″	28 1/16″	28 1/16″	21 1/16″
80″	21 7/16″	42 1/2″	16 3/8″	30 1/8″	30 1/8″	22 9/16″
85″	22 7/8″	45 7/16″	17 3/8″	32 3/16″	32 3/16″	24″
90″	24 3/8″	48 3/8″	18 7/16″			
95″	25 13/16″	51 1/4″	19 1/2″			
100″	27 1/4″	54 3/16″	20 1/2″			
105″	28 3/4″	57 1/8″	21 9/16″			
110″	30 3/16″	60 1/16″	22 9/16″			
115″	31 11/16″	63″	23 5/8″			
120″						
125″						
130″						
135″						
140″						

30 Degree Double Hung Bay

RO Width	1:2:1 Ratio			1:1:1 Ratio		
	Flanker Inside Opening	Center Inside Opening	Projection	Flanker Inside Opening	Center Inside Opening	Projection
50″				16 3/16″	16 3/16″	8 3/4″
55″				18″	18″	9 5/8″
60″	14 5/8″	28 7/8″	7 15/16″	19 13/16″	19 13/16″	10 9/16″
65″	15 15/16″	31 9/16″	8 5/8″	21 11/16″	21 11/16″	11 1/2″
70″	17 5/16″	34 1/4″	9 5/16″	23 1/2″	23 1/2″	12 3/8″
75″	18 5/8″	36 15/16″	9 15/16″	25 5/16″	25 5/16″	13 5/16″
80″	20″	39 5/8″	10 5/8″	27 3/16″	27 3/16″	14 3/16″
85″	21 5/16″	42 1/4″	11 5/16″	29″	29″	15 1/8″
90″	22 5/8″	44 15/16″	11 15/16″	30 13/16″	30 13/16″	16 1/16″
95″	24″	47 5/8″	12 5/8″	32 5/8″	32 5/8″	16 15/16″
100″	25 5/16″	50 5/16″	13 5/16″	34 1/2″	34 1/2″	17 7/8″
105″	26 11/16″	53″	14″	36 5/16″	36 5/16″	18 13/16″
110″	28″	55 11/16″	14 5/8″	38 1/8″	38 1/8″	19 11/16″
115″	29 3/8″	58 3/8″	15 5/16″	40″	40″	20 5/8″
120″	30 11/16″	61 1/16″	16″	41 13/16″	41 13/16″	21 9/16″
125″	32 1/16″	63 11/16″	16 5/8″	43 5/8″	43 5/8″	22 7/16″
130″	33 3/8″	66 3/8″	17 5/16″	45 7/16″	45 7/16″	23 3/8″
135″	34 11/16″	69 1/16″	18″	47 5/16″	47 5/16″	24 5/16″
140″	36 1/16″	71 3/4″	18 11/16″			

Individual Window Inside Opening Height = RO Height – 1 11/16″ at 0° sill angle.
The sizes listed above are approximate and should be used for estimating only. Please refer to MQS for exact dimensions.
Projection and Jamb depth can not exceed 29″.
Seat Depth = Projection + Jamb – 2 15/16″.